Bigham Ag Strip Till Generation 3 Operators Manual

Model #789-222
Model #789-223

800-692-4449 • 705 East Slaton Rd. • P.O. Box 3338 • Lubbock, TX 79452

Table of Contents

Do Not Use or Operate This Equipment Until You Have Read and Understand This Manual

The purpose of this manual is to explain maintenance requirements and adjustments which are necessary for the most efficient operation of the machine. Read this manual thoroughly and completely before using your machine. Keep this manual handy for reference when questions arise.

Should you have questions or difficulties which your dealer or representative are unable to answer, please call or write:

Bigham Ag
705 E. Slaton Rd.
P.O. Box 3338
Lubbock, TX 79452
Office: (800) 692-4449
Fax: (806) 745-1082

SAFETY FIRST

PREVENT ACCIDENTS BY "THINKING SAFETY" IN UNLOADING, SETTING UP, MOVING, STORAGE AND OPERATING ALL EQUIPMENT

P/N B15-789 Revised 12-07-2015. Printed in the U.S.A. Specifications and design subject to change without notice.

A MESSAGE TO THE OWNER AND OPERATOR

This machine was carefully designed and manufactured to give you dependable service. To keep it running efficiently, read the instructions in this Operator's Manual. Check each item and acquaint yourself with the adjustments required to obtain efficient operation and maximum performance. Remember, the machines performance depends on how you operate and care for it.

After each operating season, thoroughly clean your machine and inspect it. Preventive maintenance saves time and pays dividends. Your dealer has original equipment parts which assure proper fit and best performance. Record the model number, serial number and date of purchase in the space provided on this page. Your dealer needs this information to give you efficient service when you order parts or attachments. The model number and serial number appear on the identification plate on the rear left side of the tool bar mast.

The warranty on your machine is included with this manual. Your dealer will review the manual and warranty with you when you take delivery of your machine.

WARRANTY

Bigham Ag warrants all products of its manufacture to be free from defects in materials and workmanship for a period of one year from date of delivery to the retail purchaser. Parts assumed to be defective must be returned F.O.B. Lubbock, Texas for our inspection or inspected in the field by our authorized representative. Our obligation under this warranty is limited to replacement or repair of the defective part and does not cover other damages to persons or property. Other than the aforesaid, no warranties of merchantability or fitness for a particular purpose will apply. We do not assume liability for altered or remanufactured components or machines or applications beyond their intended use. Some states do not allow limitation of how long an implied warranty lasts, or exclusions of, or limitations on relief such as incidental or consequential damages, so the above limitations or exclusion may not apply to you. This warranty gives you specific legal rights and you may have other rights which vary from state to state.

Warranty does not cover damage due to abuse, neglect, collision, towing, pulling, normal wear and tear or any other factor beyond the control of the manufacturer. Tool bars that are bent, bowed or that have been welded on or modified in any way are specifically excluded from any warranties.

Model Number: _____

Serial Number: _____

Date Of Purchase: _____

LIMITED LIFETIME WARRANTY ON TOOL BAR CLAMPS

Bigham Ag will replace any ductile iron clamp body that breaks or cracks under normal use for as long as the original purchaser owns them. This includes all replaceable bolt ductile iron clamps sold by Bigham Ag after December 31, 1987.

Clamps that fail should be returned to Bigham Ag, freight prepaid along with caps, bolts, set screws and nuts for evaluation. If found to have failed under normal operating conditions, a new clamp body will be returned along with your old caps, bolts, set screws and nuts. Only clamps that have been used with Grade 2 bolts of the proper size will be replaced. All other provisions of the above warranty apply.

Safety Requirements

TAKE NOTE! THIS SAFETY ALERTS SYMBOL FOUND THROUGHOUT THIS MANUAL IS USED TO CALL YOUR ATTENTION TO INSTRUCTIONS INVOLVING YOUR PERSONAL SAFETY AND THE SAFETY OF OTHERS. FAILURE TO FOLLOW THESE INSTRUCTIONS CAN RESULT IN INJURY OR DEATH.

THIS SYMBOL MEANS

- **ATTENTION!**
- **BECOME ALERT!**
- **YOUR SAFETY IS INVOLVED!**

Signal Words

Note the use of the signal words DANGER, WARNING and CAUTION with the safety messages. The appropriate signal word for each has been selected using the following guidelines:

DANGER

DANGER: Indicates an imminently hazardous situation that, if not avoided, will result in death or serious injury. This signal word is to be limited to the most extreme situations, typically for machine components which, for functional purposes, cannot be guarded.

WARNING

WARNING: Indicates a potentially hazardous situation that, if not avoided, could result in death or serious injury, an includes hazards that are exposed when guards are removed. It may also be used to alert against unsafe practices.

CAUTION

CAUTION: Indicates a potentially hazardous situation that, if not avoided, may result in minor or moderate injury. It may also be used to alert against unsafe practices.

General Safety Guidelines

Safety of the operator and any bystanders is one of the main concerns in designing and developing a new piece of equipment. Designers and manufacturers build in as many safety features as possible. However, every year many accidents occur which could have been avoided by a few seconds of thought and a more careful approach to handling equipment. You, the operator, can avoid many accidents by observing the following precautions in this section. To avoid personal injury, study the following precautions and insist those working with you, or for you, follow them.

- Replace any CAUTION, WARNING, DANGER or instruction safety decal that is not readable or is missing. Location of such decals is indicated in this booklet.
- Do not attempt to operate this equipment under the influence of drugs or alcohol. Do not use the equipment if alertness or coordination is impaired.
- Review the safety instructions with all users annually.
- This equipment is dangerous to children and persons unfamiliar with its operation. The operators should be a responsible adult familiar with farm machinery and trained in this equipment's operations. Do not allow persons to operate or assemble this unit until they have read this manual and have developed a thorough understanding of the safety precautions and of how it works.
- Do not read, eat, drink, talk or text or use a mobile phone while using this equipment.
- To prevent injury or death, use a tractor equipped with a Roll Over Protective System (ROPS). Do not paint over, remove or deface any safety signs or warning decals on your equipment. Observe all safety signs and practice the instructions on them.
- Never exceed the limits of a piece of machinery. If its ability to do a job, or to do so safely, is in question.
  - DO NOT TRY IT.
- Stay clear of any moving parts, such as shafts, couplings and universal joints.
- If adjustments need to be made, make them in small steps, shutting down all motions for each adjustment.
- Do not allow anyone to ride on any part of the equipment for any reason.
- Assure that all bystanders are at a safe distance before operating or maintaining this equipment.

Bigham Ag Serial Tag

The Bigham Ag serial tag provides important information for service and warranty work. The model number and serial number provide Bigham Ag Dealers and the Bigham Ag Customer Service department with exact specifications of your implement.

- Serial tags are located on the rear left side of toolbars that incorporate a top mast. On toolbars that do not use a top mast the serial tag is located on the front left of the toolbar.

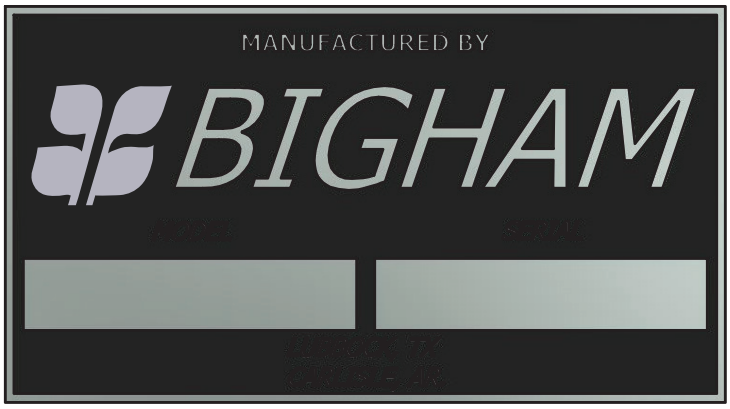

Bigham Ag Manual Holder

Manual holders contain all relevant owners manuals for the product they are attached to. Please keep the manual in the tube so that it is easily available to reference back to.

- For toolbars with a top mast manual tubes are located on the front left of the toolbar mast. For toolbars without a top mast manual tube holders a located on the top left side of the toolbar.

Safety Decal Locations

- Safety decals are located around to toolbar to warn you of potentially dangerous situations.
- Please pay close attentions to all safety decals.
- Please replace any safety decals that are missing or have become illegible.

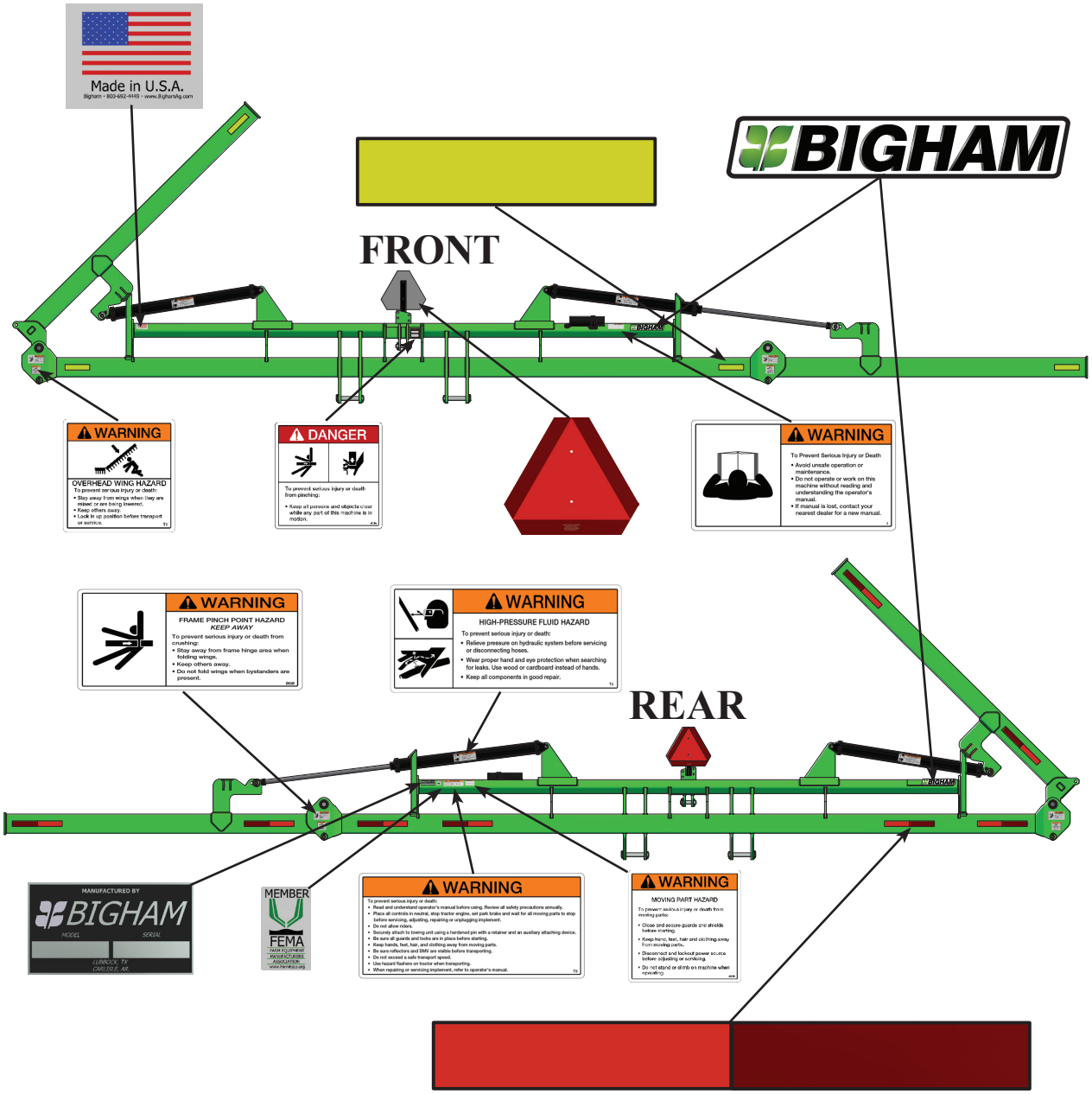

Safety Decal Care

- Keep safety signs clean and legible at all times.
- Replace safety signs that are missing or have become illegible.
- Replaced parts that displayed a safety sign should also display the current safety sign.
- Safety signs are available from your Distributor or Dealer Parts Department or the factory.

How to Install Safety Signs:

- Be sure that the installation area is clean and dry.
- Decide on the exact position before you remove the backing paper.
- Remove the smallest portion of the split backing paper.
- Align the decal over the specified area and carefully press the small portion with the exposed sticky backing in place.
- Slowly peel back the remaining paper and carefully smooth the remaining portion of the decal in place.
- Small air pockets can be pierced with a pin and smoothed out using the piece of decal backing paper.

Tire Safety

- Failure to follow proper procedures when mounting a tire on a wheel or rim can produce an explosion which may result in serious injury or death.
- Do not attempt to mount a tire unless you have the proper equipment and experience to do the job.
- Inflating or servicing tires can be dangerous. Whenever possible, trained personnel should be called to service and/or mount tires.
- Always order and install tires and wheels with appropriate capacity to meet or exceed the anticipated weight to be placed on the equipment.

Lighting and Marking

- It is the responsibility of the customer to know the lighting and marking requirements of the local highway authorities and to install and maintain the equipment to provide compliance with the regulations. Add extra lights when transporting at night or during periods of limited visibility.
- Lighting kits are available from your dealer or from the manufacturer.

Before Operation

- Carefully study and understand this manual.
- Do not wear loose-fitting clothing which may catch in moving parts.
- Always wear protective clothing and substantial shoes.
- Keep wheel lug nuts or bolts tightened to specified torque.
- Assure that agricultural implement tires are inflated evenly.
- Give the unit a visual inspection for any loose bolts, worn parts or cracked welds, and make necessary repairs. Follow the maintenance safety instructions included in this manual.
- Be sure that there are no tools lying on or in the equipment.
- Do not use the unit until you are sure that the area is clear, especially children and animals.
- Don't hurry the learning process or take the unit for granted. Ease into it and become familiar with your new equipment.
- Practice operation of your equipment and its attachments. Completely familiarize yourself and other operators with its operation before using.
- Use a tractor equipped with a Roll Over Protective System (ROPS) and fasten your seat belt prior to starting the engine.
- The manufacturer does not recommend usage of tractor with ROPS removed.
- Securely attach to towing unit. Use a high strength, appropriately-sized hitch pins with a mechanical retainer.
- Do not allow anyone to stand between the tongue or hitch and the towing vehicle when backing up to the equipment.

During Operation

- Children should never be allowed on the equipment.
- Clear the area of small children and bystanders before moving the equipment.
- Securely attach equipment to towing unit, using correct hitch pin , a metal retainer, and safety chains if required. Shift towing unit to a lower gear before going down steep downgrades, thus using the engine as a retarding force. Keep towing vehicle in gear at all times. Slow down for corners and rough terrain.
- Make sure you are in compliance with all local and state regulations regarding transporting equipment on public roads and highways. Lights and slow moving signs must be clean and visible by overtaking or oncoming traffic when cultivator is transported.
- Install the safety chain by crossing the chains under the tongue and secure to the draw bar cage or hitch or bumper frame.
- Beware of bystanders, particularly children! Always look around to make sure that it is safe to start the engine of the towing vehicle or move the unit. This is particularly important with higher noise levels and quiet cabs, as you may not hear people shouting.
- NO PASSENGERS ALLOWED - Do not carry passengers anywhere on, or in, the tractor or equipment, except as required for operation.
- Keep hands and clothing clear of moving parts.
- Always keep all shields and guards in place and securely fastened.
- Do not clean, lubricate or adjust your equipment while it is moving.
- When halting operation, even periodically, set the tractor or towing vehicle brakes, shut off the engine and remove the ignition key.
- Be especially observant of the operating area and terrain - watch for holes, rocks or other hidden hazards. Always inspect the area prior to operation.
  - — DO NOT operate near the edge of drop-offs or banks.
  - — DO NOT operate on steep slopes as overturn may result.
  - — Operate up and down (not across) intermediate slopes. Avoid sudden starts and stops.
- Adopt safe driving practices:
  - — Keep the brake pedals latched together at all times. NEVER USE INDEPENDENT BRAKING

Highway and Transport Operations

WITH MACHINE IN TOW A LOSS OF CONTROL AND/OR UPSET OF UNIT CAN RESULT.

— Always drive at a safe speed relative to local conditions and ensure that your speed is low enough for an emergency stop to be safe and secure. Keep speed to a minimum.

— Reduce speed prior to turns to avoid the risk of overturning.

— Avoid sudden uphill turns on steep slopes.

— Always keep the tractor or towing vehicle in gear to provide engine braking when going downhill. Do not coast.

— Do not drink and drive!

- Comply with state and local laws governing highway safety and movement of farm machinery on public roads.
- Use approved accessory lighting flags and necessary warning devices to protect operators of other vehicles on the highway during daylight and nighttime transport. Various safety lights and devices are available from your dealer.
- The use of flashing amber lights is acceptable in most localities. However, some localities prohibit their use. Local laws should be checked for all highway lighting and marking requirements.
- When driving the tractor and equipment on the road or highway under 20 mph at night or during the day, use flashing amber warning lights and a slow moving vehicle (SMV) identification emblem.
- Plan your route to avoid heavy traffic.
- Be a safe and courteous driver. Always yield to oncoming traffic in all situations, including narrow bridges, intersections, etc.
- Be observant of bridge loading ratings. Do not cross bridges rated lower than the gross weight as which you are operating.
- Watch for obstructions overhead and to the side while transporting.
- Always operate equipment in a position to provide maximum visibility at all times. Make allowances for increased length and weight of the equipment when making turns, stopping the unit, etc.
- Pick the levelest possible route when transporting across fields. Avoid the edges of ditches or gullies and steep hillsides.
- Be extra careful when working on inclines.
- Maneuver the tractor or towing vehicle at safe speeds.

- Avoid overhead wires or other obstacles. Contact with overhead lines could cause serious injury or death.
- Avoid loose fill, rocks and holes; they can be dangerous for equipment operation or movement.
- Allow for unit length when making turns.
- Operate the towing vehicle from the operator's seat only.
- Never stand alongside of unit with engine running or attempt to start engine and/or operate machine while standing alongside of unit.
- Never leave running equipment attachments unattended.
- As a precaution, always recheck the hardware on equipment following every 100 hours of operation. Correct all problems. Follow the maintenance safety procedures.

Following Operation

- Following operation, or when unhitching, stop the tractor or towing vehicle, set the brakes, shut off the engine and remove the ignition keys.
- Store the unit in an area away from human activity.
- Do not permit children to play on or around the stored unit.
- Make sure all parked machines are on a hard, level surface and engage all safety devices.
- Wheel chocks may be needed to prevent unit from rolling.

Performing Maintenance

- Good maintenance is your responsibility. Poor maintenance is an invitation to trouble. Proper servicing and adjustments are key to the long life of any implement. With careful inspection and routine maintenance, costly downtime and repairs can be avoided.
- Some parts and assemblies can be quite heavy. Before attempting to unfasten any part or assembly, arrange to support it by means of a hoist, by blocking or by use of an adequate arrangement to keep it from falling, tipping, swinging or moving in any manner which may hurt somebody or damage the equipment.
- Always use lifting equipment that is adequately rated to do the job. Never lift equipment over people.
- Make sure there is plenty of ventilation. Never operate the engine of the towing vehicle in a closed building. The exhaust fumes may cause asphyxiation.
- Before working on the equipment, stop the towing vehicle, set the brakes, disengage all power drives, shut off the engine and remove the ignition keys.

- Be certain all moving parts on attachments have come to a complete stop before attempting to perform maintenance.
- Always use a safety support and block the wheels. Never use a jack to support the equipment.
- Always use the proper tools or equipment for the job at hand.
- Use extreme caution when making adjustments.
- Never replace hex bolts with less than grade five bolts unless otherwise specified.
- After servicing, be sure all tools, parts and service equipment are removed.
- Where replacement parts are necessary for periodic maintenance and servicing, genuine factory replacement parts must be used to restore your equipment to original specifications. The manufacturer will not claim responsibility for use of unapproved parts and/or accessories and other damages as a result of their use.
- If equipment has been altered in any way from original design, the manufacturer does not accept any liability for injury or warranty.
- If repairs require the use of a torch or electric welder, be sure that all flammable and combustible materials are removed.
- Do not weld or cut on any tank containing oil, fuel or their fumes or other flammable material, or any container whose previous contents are unknown.
- Cleaning solvents should be used with care. Petroleum based solvents are flammable and present a fire hazard. Don't use gasoline. All solvents must be used with adequate ventilation and their vapors should not be inhaled.

Hydraulic Fluid and Equipment Safety

Only adequately trained and qualified persons should work on hydraulics systems. You may be severely injured or killed by being crushed under a falling piece of equipment. Always have transport locks in place and frame sufficiently blocked when working on any implement.

Hydraulic fluid escaping under pressure can have sufficient force to cause injury. Keep all hoses and connections in good serviceable condition. Failure to heed may result in serious personal injury or death. Escaping hydraulic fluid under pressure can have sufficient pressure to penetrate the skin causing serious injury. Avoid the hazard by relieving the pressure before disconnecting lines or performing work on the system.

Make sure hydraulic fluid connections are tight and all hydraulic hoses and lines are in good condition before applying pressure to the system. Use a piece of paper or cardboard, NOT BODY PARTS, to check

for suspected leaks. Wear protective gloves and safety glasses or goggles when working with hydraulic systems. DO NOT DELAY! If an accident occurs, see a doctor familiar with this type of injury immediately. Any fluid injected into the skin or eyes must be treated within a few hours or gangrene may result.

Always secure equipment with solid supports before working on or under it. Never work under equipment supported by hydraulics. Hydraulics can drop equipment if controls are actuated or hydraulic lines burst or pressure is lost while disconnecting lines. Either situation can drop machinery instantly even when power to hydraulics is off. Do not attempt to disconnect a hydraulic cylinder or hose while the system is under pressure! Check hydraulic hoses and fittings frequently. Brush and other debris can damage hoses and fittings. Inspect and maintain equipment daily. Loose, broken, and missing hardware can cause equipment to not perform properly and can result in bodily injury or death.

Hydraulic systems and oil can be hot and cause burns. Before working on any system, wait until the oil has cooled.

Lockout / Tagout

Think, plan and check. Think through the entire procedure and identify all the steps that are required. Plan what personnel will be involved, what needs to be shut down, what guards need to be removed, and how (and under what conditions) the power will be restarted. Check the machine over to verify all power sources and stored energy have been identified including engines, hydraulic and pneumatic systems, springs and accumulators, and suspended loads, Shutoff and lockout power before adjusting, servicing, maintaining, or clearing an obstruction from this machine. Failure to heed may result in serious injury or death. Communicate with everyone involved in a repair or maintenance operation, including bystanders, that work is being done which involves keeping this machine safety at a ZERO ENERGY STATE.

OSHA's requirements for lockout/tagout are covered in Section 1910.147 of the OSHA standards. The LOTO standard establishes the employer's responsibility to protect workers from hazardous energy. Employers are required to train each worker to ensure that they know, understand, and are able to follow the applicable provisions of the hazardous energy control procedures:

- Proper lockout/tagout (LOTO) practices and procedures safeguard workers from the release of hazardous energy. The OSHA standard for The Control of Hazardous Energy (Lockout/Tagout) for general industry, outlines specific action and procedures for addressing and controlling hazardous energy during servicing and maintenance of machines and equipment. Employers are also required to train each worker to ensure that they know, understand, and are able to follow the applicable provisions of the hazardous energy control procedures. Workers must be trained in the purpose and function of the energy control program and have the knowledge and skills required for the safe application, usage and removal of the energy control devices.

- All employees who work in the area where the energy control procedure(s) are utilized need to be instructed in the purpose and use of the energy control procedure(s) and about the prohibition against attempting to restart or reenergize machines or equipment that is locked or tagged out.
- All employees who are authorized to lockout machines or equipment and perform the service and maintenance operations need to be trained in recognition of applicable hazardous energy sources in the workplace, the type and magnitude of energy found in the workplace, and the means and methods of isolating and/or controlling the energy.
- Specific procedures and limitations relating to tagout systems where they are allowed.
- Retraining of all employees to maintain proficiency or introduce new or changed control methods.

OSHA outlines a six-step procedure for controlling hazardous energy:

- **Step 1:** Prepare for shutdown. It must be determined what type of power system is going to be deactivated including electrical, hydraulic, pneumatic or other energy sources. Knowledge of shut down methods is necessary.
- **Step 2:** Shutdown the equipment. This should be completed consistent with the manufacturer's instructions for the shutdown procedure and could be a simple as placing a switch in the "off" position or pressing a button.
- **Step 3:** Isolate the equipment. This step involves closing of valves, throwing the main disconnects or circuit breakers and disconnecting or capping any auxiliary power sources or secondary electrical systems.
- **Step 4:** Apply the lockout/tagout device. This is done to prevent restoration of the flow of energy and is done at all disconnect switches, valves or other energy isolating devices. Locks are the preferred method of controlling energy and should be supplemented with tags. Various lockout devices are available including group lockout hasps. Locks should be individually assigned and have only one key.
- **Step 5:** Control the stored energy. This step includes the release, disconnect or restraint of any residual hazardous energy which may be present and a check that all moving parts have stopped moving. It may also include the installation of "pancakes" or blanking of pipe flanges, the installation of ground wires to discharge electrical capacitors and the blocking or supporting of elevated equipment.
- **Step 6:** Verify isolation of equipment. Double-check the steps and verify that the equipment indeed has been shut down and that the lock and tag do control the stored energy. Employees should be warned and the system tested, including pressing of all start buttons to assure that the equipment will not start.

Maintenance

Lubrication

- Lubricate the grease fitting in the hinge pivots of the folding toolbars with a multi purpose grease every 50 hours of operation.
- Lubricate the grease fitting on the rear baskets or rollers after every 25 hours of operation.

Fasteners

- All fasteners should be checked and re-tightened after the initial thirty minutes of operation.
- All fasteners should be checked and re-tightned after every 25 hours of operation.

Seasonal Maintenance

- Clean the Strip Till thoroughly to remove dirt and trash which could hold moisture and cause rusting.
- Apply a good rust preventative to all land polished surfaces, such as coulters, tillage shanks, discs and baskets.
- Lubricate all toolbar grease fittings to fill cavities and prevent moisture build up.

Use and Care Tips From the Factory

- Spending the time to properly set your Bigham Ag Strip Till Generation 3 in the beginning will pay dividends in the end.

Assistance

- If you have questions not answered in this manual or require additional copies, please contact your dealer or Bigham Ag.

705 East Slaton Road, Lubbock, Texas, 79452
Office: (800) 692-4449 Fax: (806) 745-1082
www.bighamag.com

BE A SAFE OPERATOR, THINK BEFORE OPERATING.
READ ALL INSTRUCTIONS BEFORE ASSEMBLY
OR OPERATION OF THE BIGHAM AG STRIP TILL!

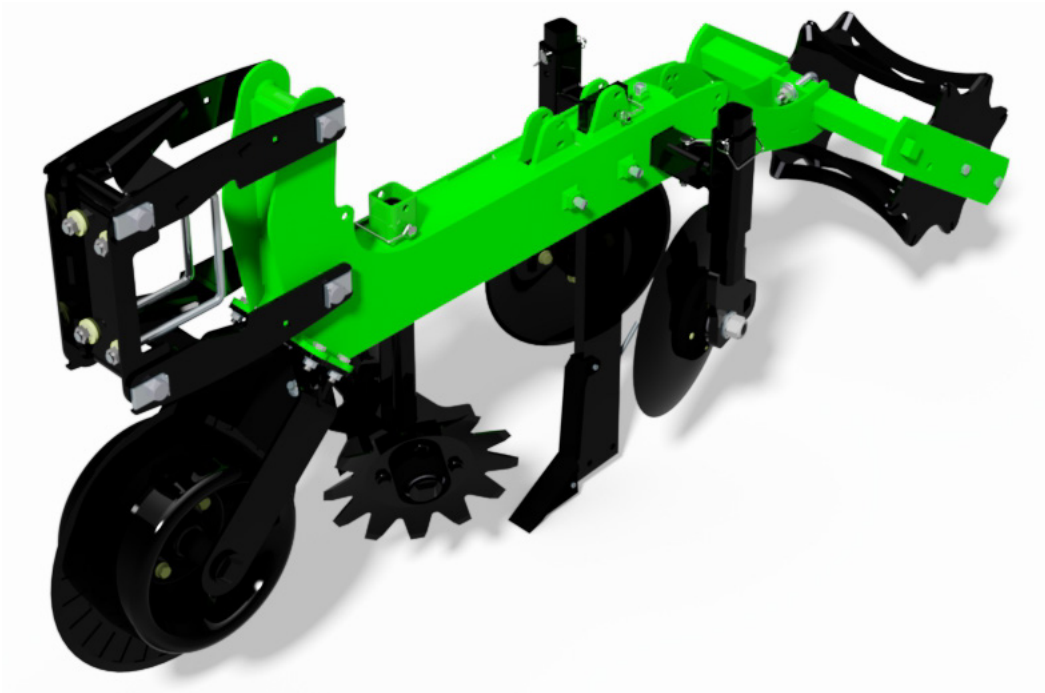

INTRODUCTION:

- Soil compaction and hardpan can quickly become a limiting factor to crop yields. These conditions can be created by many factors including field traffic, livestock and working fields that are to wet. As soil density increases, a physical barrier develops which inhibits plant root development and soil permeation. Seed germination can be limited by cool soil temperatures early in the planting season when soil is left untilled and covered with residue.

- Tillage helps alleviate the problems associated with hard pan and cool soil temperatures, but conventional full tillage can destroy surface residue and lead to erosion. Tilling the full width of the field also has a cost in horsepower, fuel, tooling, and mechanical maintenance.

- The Bigham Strip Till Generation 3 is a unique soil loosener that prepares a mellow seedbed, but leaves other surface areas intact. Standing stalks, surface residue or cover crops outside of the seedbed lanes prevents wind and water erosion. Deep placement of fertilizer may also be accomplished by use of delivery tubes to the rear of each tillage shank.

- The Bigham Strip Till Generation 3 should be used during fall or spring seed bed preparation. This will allow maximum absorption and storage of water and nutrients for future use.

Strip Till Overview

- Bigham Strip Till Generation 3 is equipped with an even number of row units. One for each crop seedbed. Normal configuration includes a Strip Till row unit bundle , depth band coulter bundle, left/ right hand row cleaners, rear tillage shank, covering discs and rear finishing basket.

Gang Placement

- Bigham Strip Till Generation 3 row units will need to be placed over the top of the row.
- Check/set row spacing from the center line at the point of the sweep — not at the top of the clamp on the tool bar. Manufacturing tolerances may affect position at the end of the tool. Set center gang on the center line of the toolbar. Ensure center of sweep is on center. Run a tape from center point and ensure each point is the right distance from this point. For example, for 38” rows, points should be at 19”, 57”, 95”, 133”, 171”, 209”, etc. from the center point. Do not measure one point to the next, because any error can be compounded to the next gang.

Front Coulter

- The Bigham Strip Till Generation 3 incorporates two four inch wide depth bands mounted on 20 inch coulter blade. This provides a consistent row unit working depth.

Row Cleaners

- Row cleaners come in equal numbers of lefts and rights and should be mounted in an alternating pattern.

Tillage Shank

- A variety of tillage shanks can be installed on the Bigham Strip Till Generation 3.
- The standard unit includes a 1”x4” ripper shank. It is also available in a shear bolt protected break away model. All 1”x4” tillage shanks are eqiped with a 1/8” pipe liquid fertilizer injections tube.
- A mole knife model is also available.

Covering Disc

- The standard covering disc option includes 16 inch concave disc blades set at a 15 degree angle.
- There is also a 17 inch wavy coulter blade option. The same arms are capable of running blades straight or with 15 degrees of angle.

Rolling Basket

- The standard basket option is the flat concave basket weldment.
- Flat angle basket and roller options are available.

Toolbars

- Many toolbar configurations are available for your Bigham Strip Till Generation 3. Standard toolbars offered are rigid, vertical fold, over fold and stack fold.
- Top mast equipped single and double rigid bars are available from 2 row to 10 row configurations.
- Vertical fold toolbars are available in 7”x7” single and double bar configurations.
- Over fold toolbars are available in 7”x7” single bar and double bar configurations.
- Stack fold toolbars are available in 7”x7” double bar configurations.

Field Use and Adjustments

Seed Bed Preparation

- The primary function of the Bigham Strip Till Generation 3 is to prepare seedbeds for row crops. The standard seedbed preparation setup includes a depth band coulter, row cleaner, tillage shank, covering discs and finishing basket.

Toolbar Height

- The Strip Till units need to operate off of a level toolbar.
- The adjustment of the three point third length will be necessary to achieve a level toolbar operating position.
- The toolbar should operate at a height that allows equal travel in both directions of the row units parallel linkage arms. The linkage arms are designed for four inches of up and down travel.
- Use three point height setting or gauge wheels (if equipped) to set toolbar height. Tool bar height should be 24.5 inches from the ground to the bottom of the toolbar.

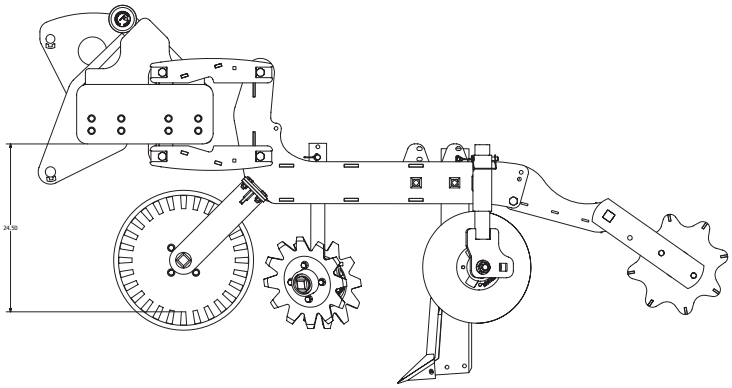

Row Unit Operation

- The depth band coulter provides a consistent operating depth by limiting the coulter depth to three inches.
- All other tooling is to be set independent of the front coulter.
- Scrpaer kits are available (889-125). Scrpaers are easily adjusted by loosening two bolts and set 1/4” away from the depth bands (See figure below).

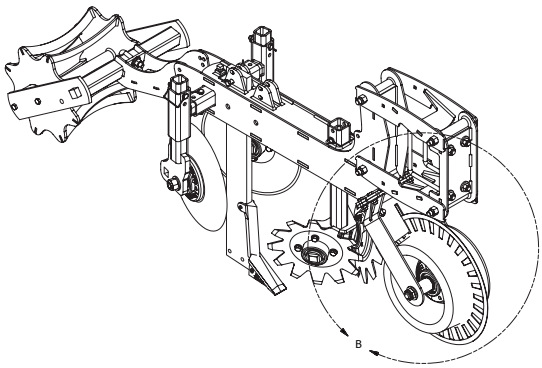

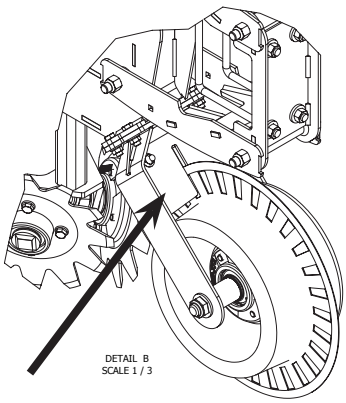

Row Unit Down Pressure (Optional)

- Row unit down pressure is not a standard option.
- The down pressure kit P/N 889-225 is available at the customers request. The down pressure kit can be requested during the initial order or installed later.
- Down pressure in adjusted by tightening or loosening the screw jack stud (See figure below).
- Tightening the screw jack stud increases down pressure and loosening the screw jack stud deceases down pressure. The screw jack stud requires a 1-1/8” wrench or socket.
- Softer soil condition typically require less down pressure and harder soil conditions require more.

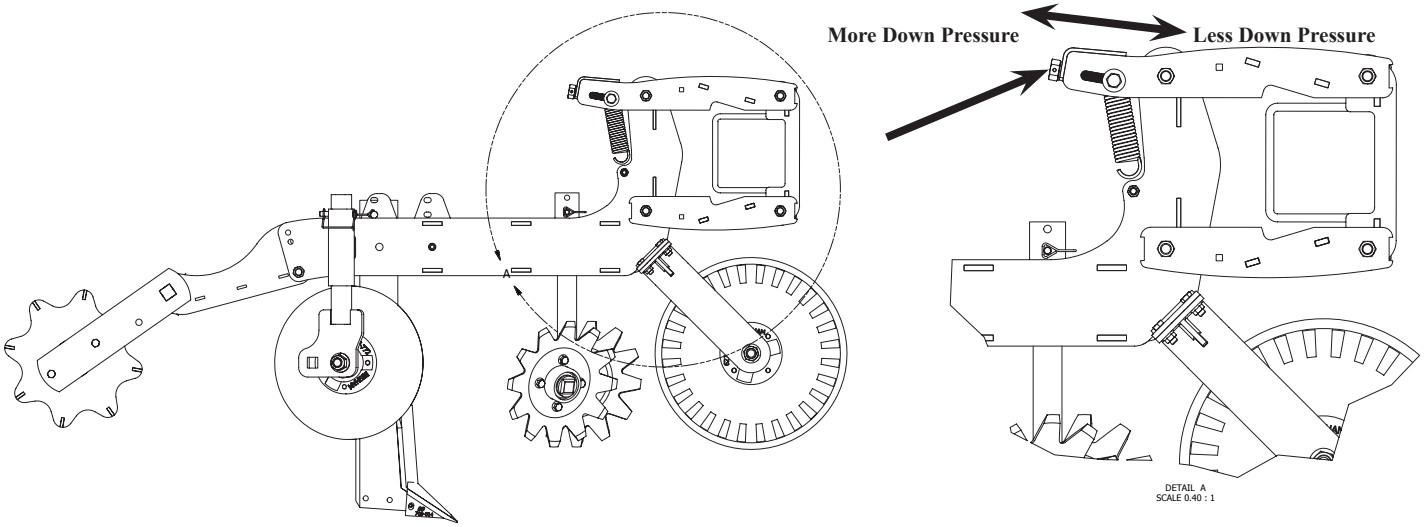

Row Cleaner Operation

- Row cleaner blades should be set only deep enough to brush residue aside. Setting row cleaner blades too far in the soil can cause premature blade ware or damage.
- Height adjustments are made in 1/2” increments with the quick adjustment pin (See figure below).

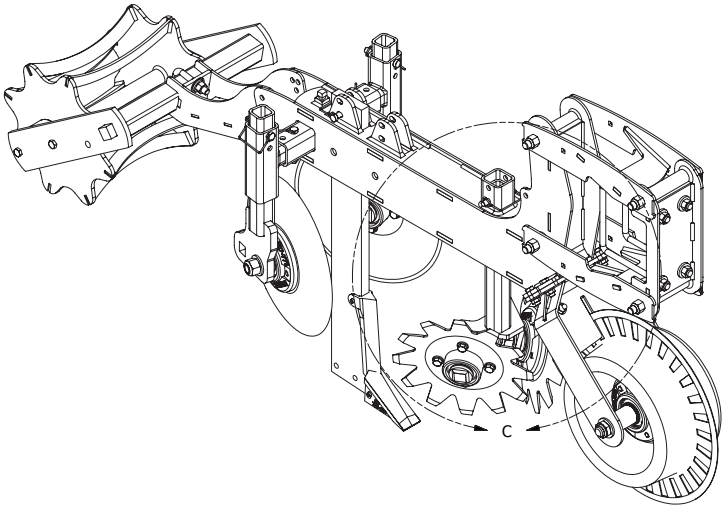

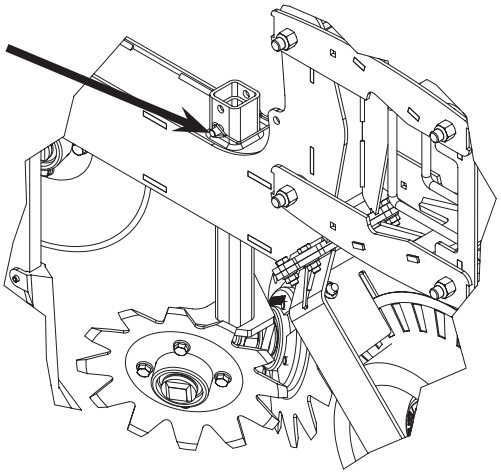

DETAIL C
SCALE 1 / 3

Tillage Shank Operation

- Tillage shanks are to set in the compacted area of the root zone.
- Two shank positions are provided. The two positions provide adjustment to allow better trash flow.
- The maximum operating depth is 10.5 inches.
- The shank depth adjustments are made in 1/2” increments with the quick adjustment pin (See figure below).

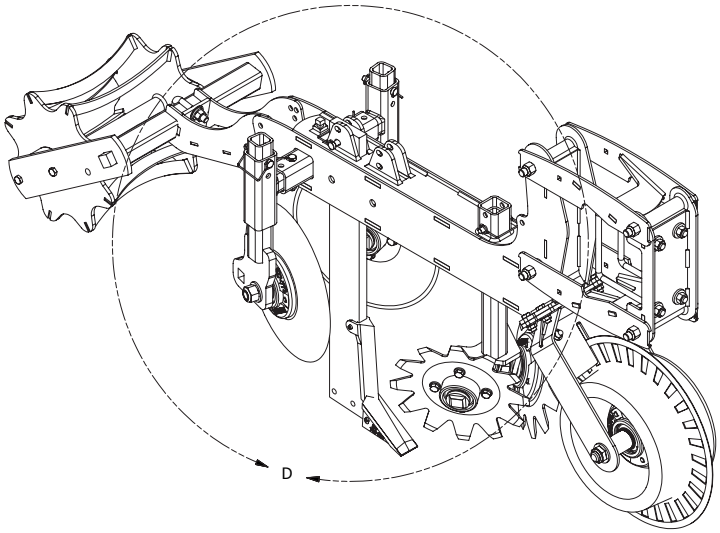

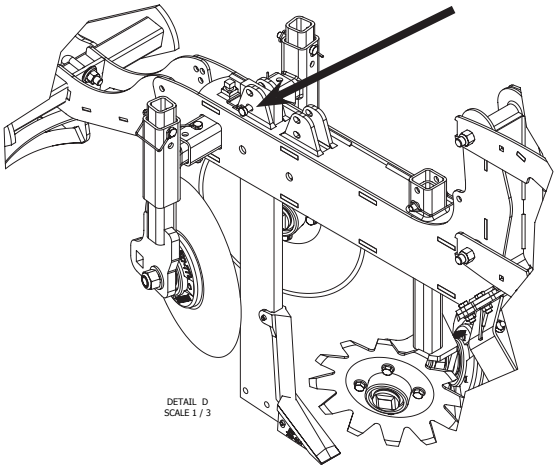

DETAIL D
SCALE 1 / 3

Covering Disc Operation

- Covering disc working width is adjusted by moving the quick adjustment arms in and out.
- Depth is controlled by moving the quick adjustment arms up or down.
- Blade pitch is controlled by swapping the shank weldments from left to right. Pitch can either be 0 degrees or 15 degrees. Wavy blades ate typically set at 0 degrees and concave blades are set at 15 degrees.

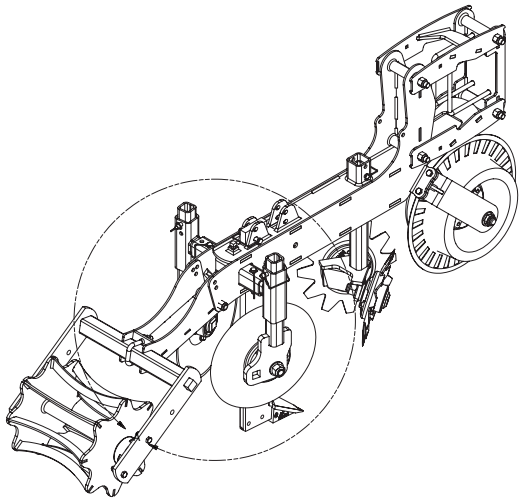

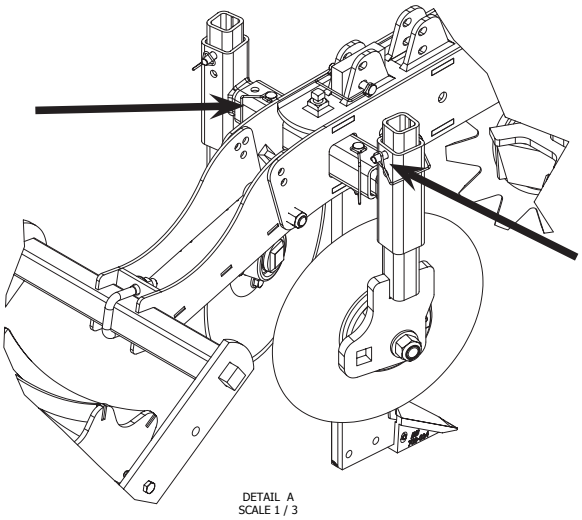

Covering Disc Shank Weldment Configurations

- The shank weldments allow for many different configurations. Each shank allows for two disc positions.
- Shanks can either be set at a 0 degree pitch or a 15 degree pitch.
- Blade pitch is controlled by swapping the shank weldments from left to right (See figure below). Wavy blades ate typically set at 0 degrees and concave blades are set at 15 degrees.

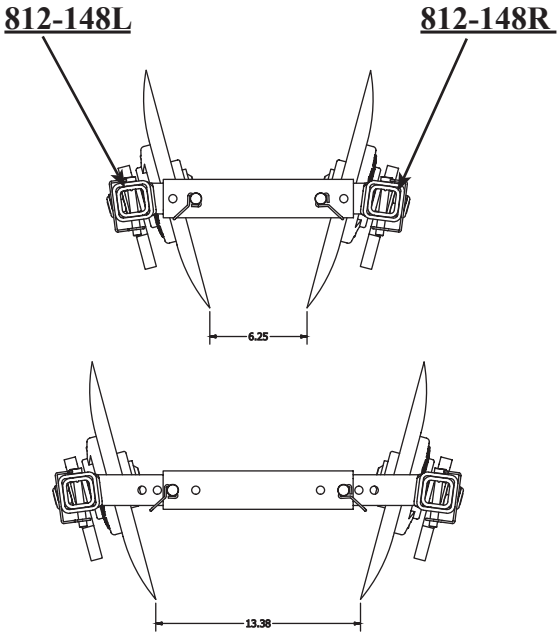

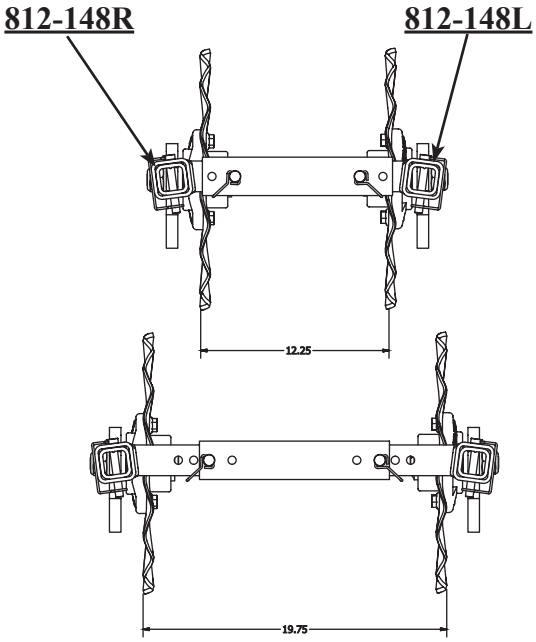

Concave Disc Configurations

- The shank weldments allow for many different configurations. Each shank allows for two disc positions. Offsetting discs allows for better trash and soil flow.
- 15 degrees of pitch is the only angle at which concave blades can be run (See figures below).
- Shank weldments can also be rotated 180 degrees to increase the spread of the disc blades (See figure below).

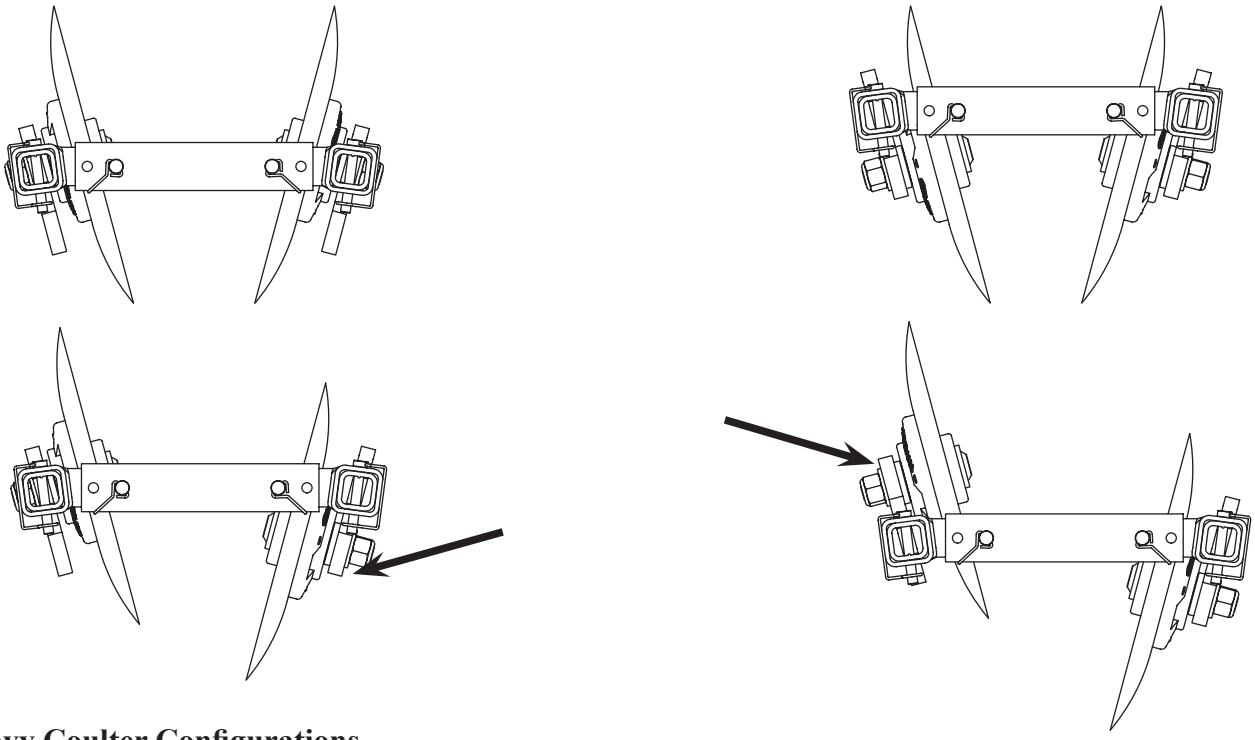

Wavy Coulter Configurations

- Wavy coulter blades are typically set at a 0 degree angle (See figures below).
- Coulter blades can be offset in the shank weldment holes. Offsetting discs allows for better trash and soil flow.
- Shank weldments can also be rotated 180 degrees to increase the spread of the disc blades (See figure below).

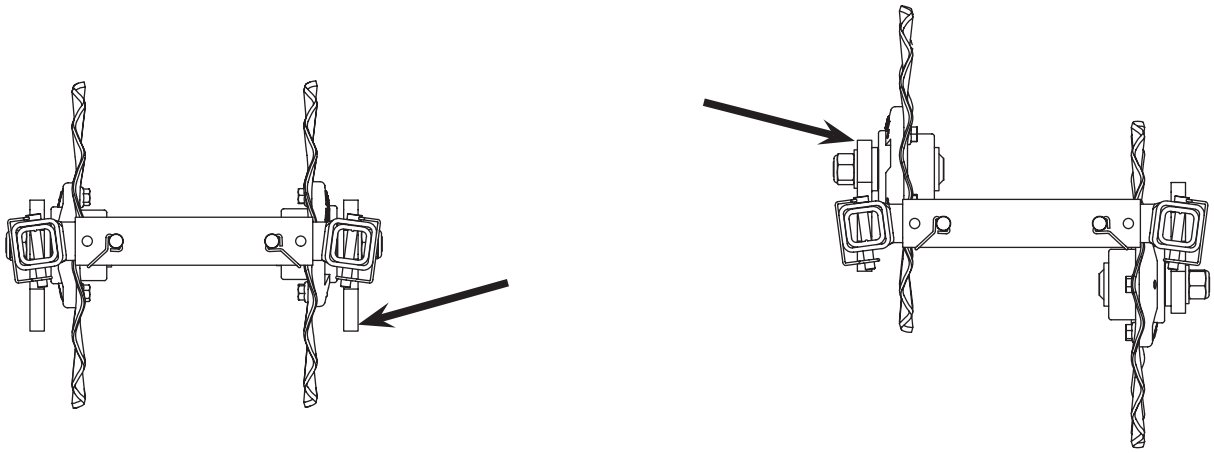

Finishing Basket Operation

- Each basket yoke is equipped with an internal rubber torsion spring. Basket down pressure is adjusted by raising or lowering the pin adjustment on the basket arm. There are three different down pressure positions available (See figure below).
- Adjust until desired firming and clod conditions are achieved.
- Note two greasable flange bearings are located at either end of the basket/roller axle (See figure below)
.

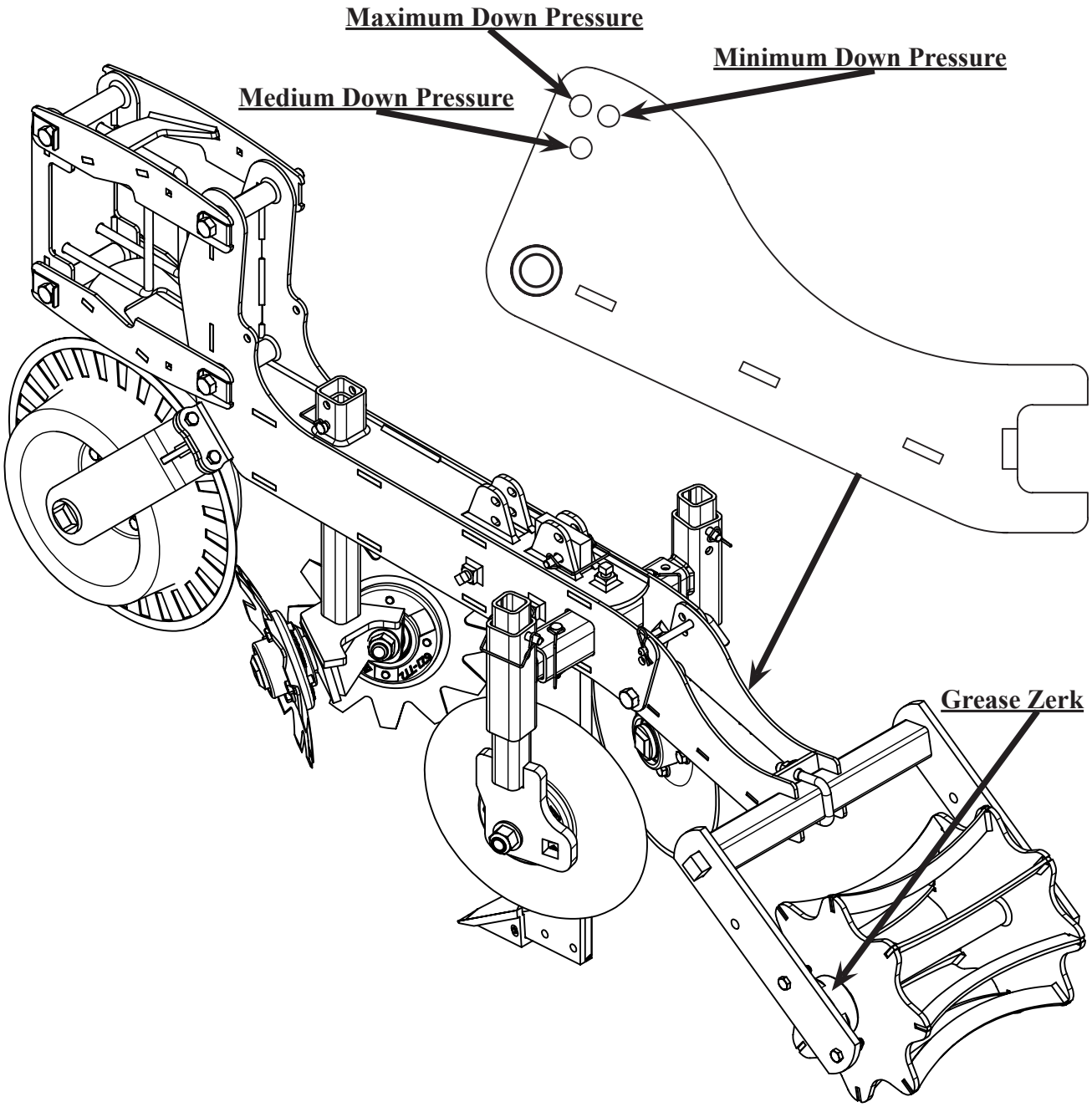

Finishing Basket Depth Guide

Minimum Basket Down Pressure

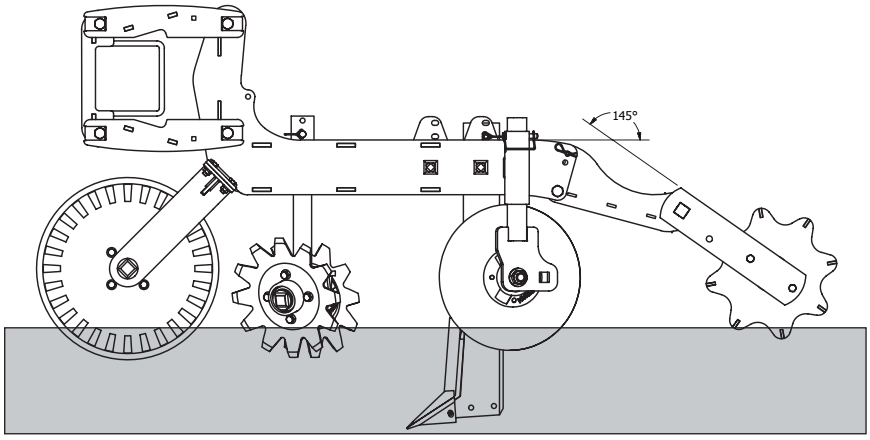

Medium Basket Down Pressure

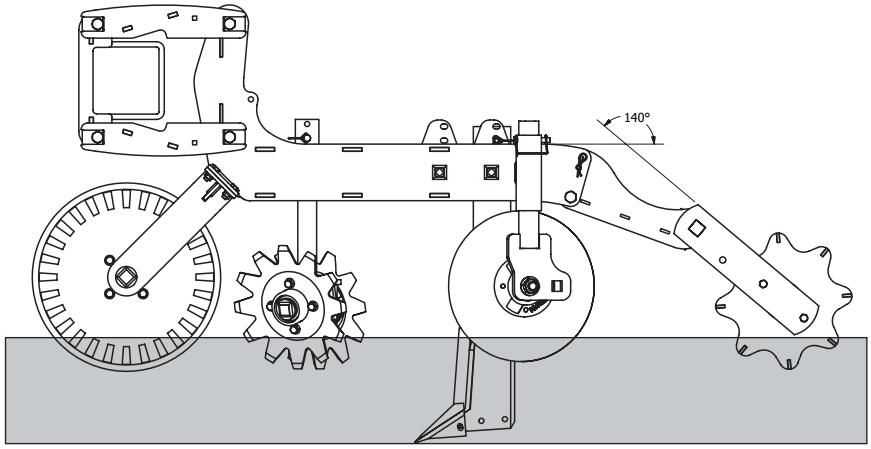

Maximum Basket Down Pressure

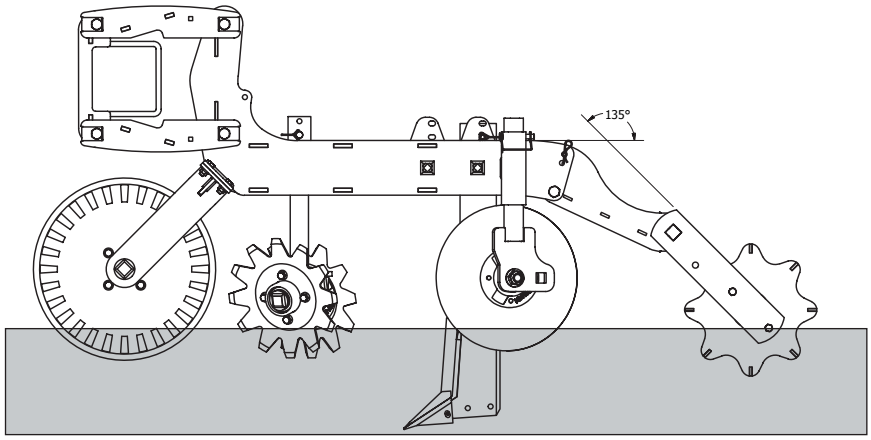

Troubleshooting

Problem	Cause	Correction
Cloddy seed bed	Operating too shallow	Raise gauge wheels or decrease three point height
	Insufficient pressure on rolling basket	Increase spring pressure on basket arm
	Foreign object on leg or point	Remove foreign object
	Soils to dry	Wait for moisture
Shearing bolts	Excessive load on the Strip Till	Reduce operating depth
	Rocks	
Trash clogging up rear tooling	Insufficient spacing between shank and covering disc	Move shank to front slot
	Soil too wet causing hair pinning of residue.	Stagger covering discs front/back Let soil dry
Tractor tire slippage	Third link too short	Lengthen third link
	Insufficient traction	Add weight; lock axles (If tractor is equipped) Adjust tractors draft control
	Soil too wet	Let soil dry
Tractor will not pull Bigham Ag Strip Till Generation 3	Insufficient horsepower	Larger heavier tractor is required
	Insufficient traction	Set tillage shanks to operate at a shallower depth
Excessive wear on tillage shanks	Wear surfaces are worn out	Replace wear surfaces
Not going into ground	Points dull	Replace points
	Unit not level	Level unit by adjusting the hitch third length
Uneven results from left to right	Tire pressures unequal or not at manufacturers recommended level	Fill tires to recommended pressure
	Lift arm linkages are not at equal lengths	Adjust lift arm linkages to equal lengths

Bigham Strip Till Generation 3
Parts Break Down
789-222 Bundle, Strip Till Tail Gang
Model Year 2015 - Current

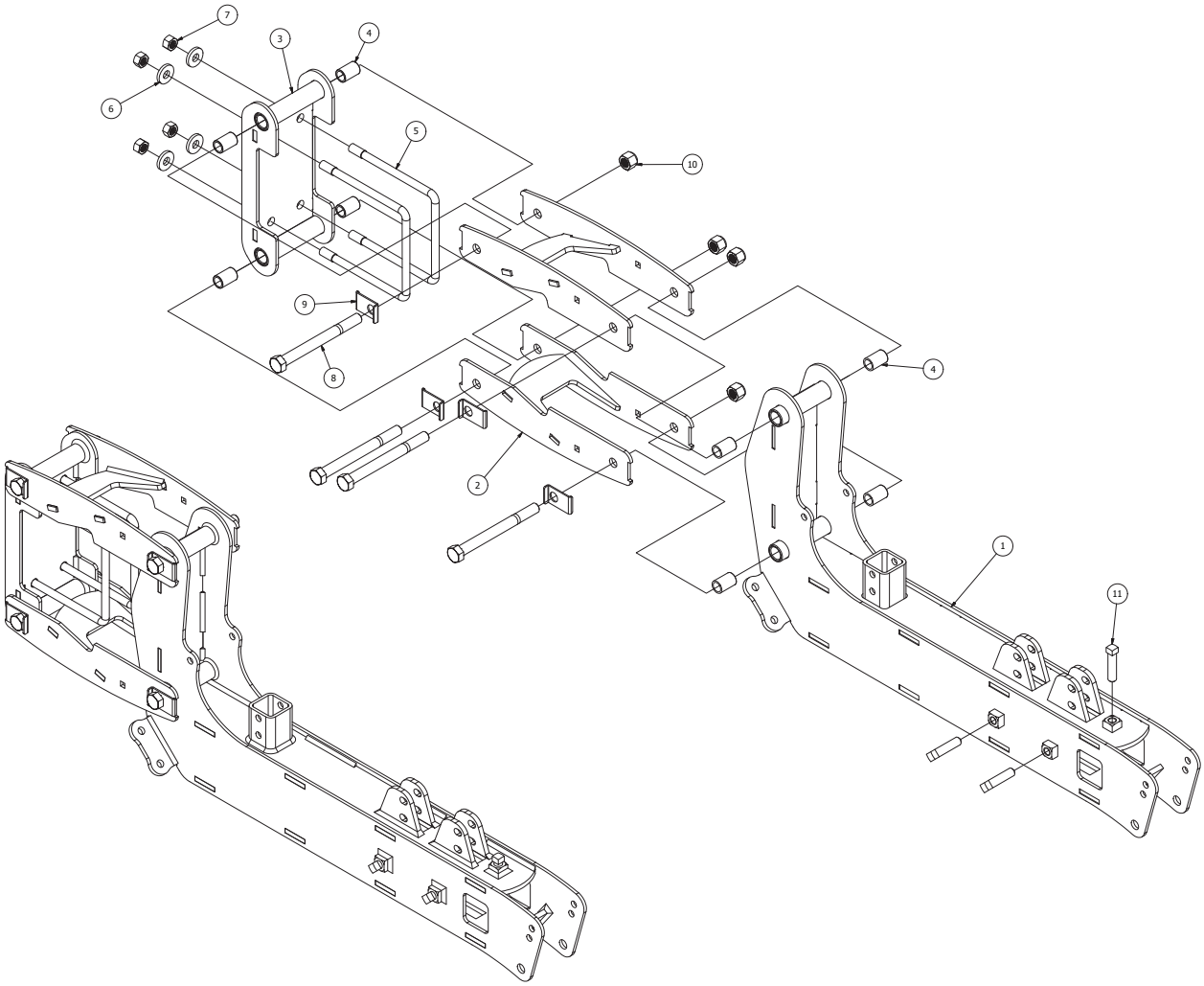

Ref#	P/N	Description	Qty. Req. Per Assy. (* As Required)	Ref#	P/N	Description	Qty. Req. Per Assy. (* As Required)
1.	789-220	TAIL GANG, STRIPTILL	1				
2.	689-307	LINKAGE ARM, CULT. WRAP AROUND	2				
3.	689-300	BRACKET, 7” CULT. WRAPAROUND	1				
4.	624-115	BUSHING, 3/4“ X 1” X1-1/2” (PLASTIC)	8				
5.	L6406012	U-BOLT, 5/8” FOR 7X7” BAR ZP.	2				
6.	616-1002Z	WASHER, FLAT 5/8 (HEAVY) ZP	4				
7.	611-1001Z	NUT, HEX ZP 5/8”	4				
8.	601-1232Z	BOLT, HCS 3/4”X8” (GR5) ZP	4				
9.	689-311	BOLT RETAINER, CULTIVATOR	4				
10.	613-1200Z	NUT, HEX NYLOCK ZP 3/4”	3				
11.	606-1010Z	SET SCREW, SQR HD 5/8”X2-1/2” ZP					

BIGHAM

Bigham Strip Till Generation 3
Parts Break Down
789-223 Bundle, Strip Till Tail Gang Down Pressure
Model Year 2015 - Current

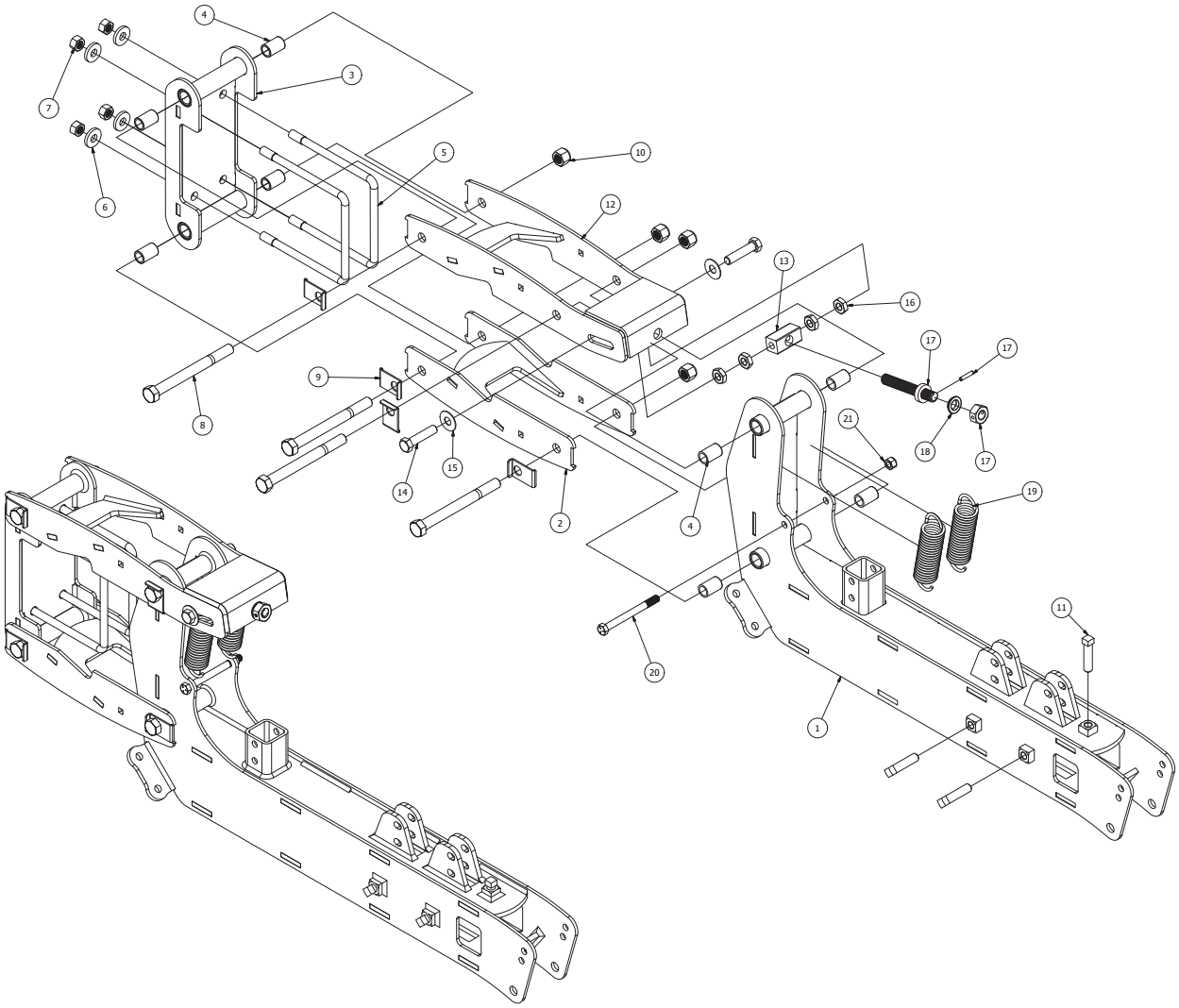

Ref#	P/N	Description	Qty. Req. Per Assy. (* As Required)
1.	789-220	TAIL GANG, STRIPTILL	1
2.	689-307	LINKAGE ARM, CULT. WRAP AROUND	1
3.	689-300	BRACKET, 7" CULT. WRAPAROUND	1
4.	624-115	BUSHING, 3/4" X 1" X1-1/2" (PLASTIC)	4
5.	L6406012	U-BOLT, 5/8" FOR 7X7" BAR ZP.	2
6.	616-1002Z	WASHER, FLAT 5/8 (HEAVY) ZP	4
7.	611-1001Z	NUT, HEX ZP 5/8"	4
8.	601-1232Z	BOLT, HCS 3/4"X8" (GR5) ZP	4
9.	689-311	BOLT RETAINER, CULTIVATOR	4
10.	613-1200Z	NUT, HEX NYLOCK ZP 3/4"	4
11.	606-1010Z	SET SCREW, SQR HD 5/8"X2-1/2" ZP	1
12.	689-332	LINKAGE ARM, DOWN PRESSURE WRAP AROUND	1
13.	310-065	TRUNION, DOWN PRESSURE	1
14.	602-1011Z	BOLT, HCS 5/8" X 2-3/4" (GR5) ZP	2
15.	616-1000Z	WASHER, FLAT ZP 5/8"	2
16.	614-1001Z	NUT, HEX JAM 5/8" ZP	4
17.	689-333	STUD, SCREW JACK	1
18.	624-114	BUSHING, 3/4" X 1-1/4" X 9/16" W/HD	1
19.	633-046	SPRING, CULTIVATOR DOWN PRESSURE	2
20.	602-0822Z	BOLT, HCS 1/2" X 5-1/2" (GR5) ZP	1
21.	613-0800Z	NUT, HEX NYLOCK ZP 1/2"	1

BIGHAM

Bigham Strip Till Generation 3
Parts Break Down
789-307 Bundle assembly, Rigid Coulter (Wide)
Model Year 2015-Current

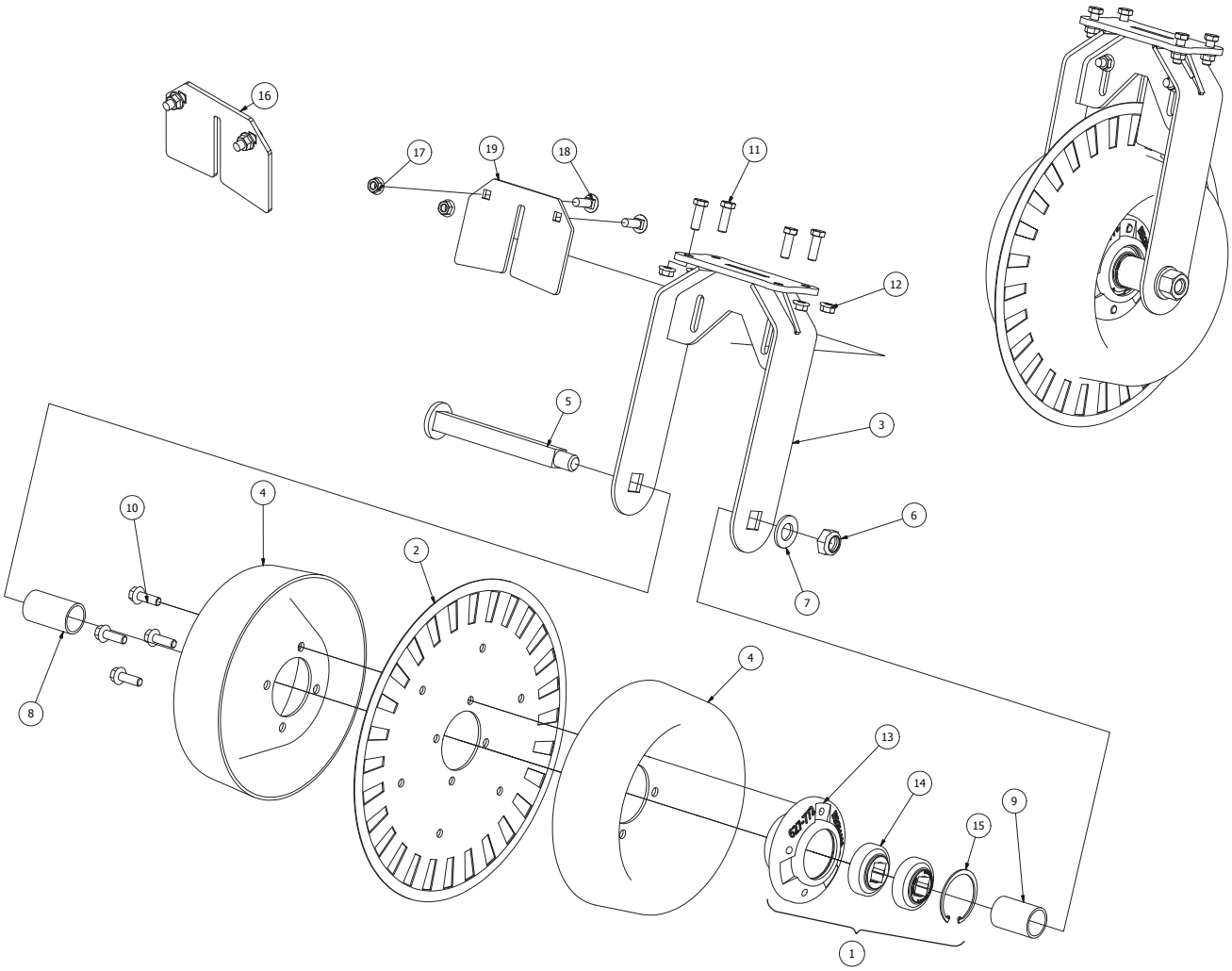

Ref#	P/N	Description	Qty. Req. Per Assy. (* As Required)
1.	627-773	HUB/BRG. ASSY, CLTR. STRIPTILL	-
2.	630-012	BLADE FLUTED 20.00X4.5MM HOLE	1
3.	689-207W	BRKT., RIGID CLTR. STRIPTILL WIDE	1
4.	660-142	DEPTH BAND, 4X14 FOR 20” BLADE	2
5.	610-0064	COULTER BOLT	1
6.	614-1606Z	NUT,HEX NYLOCK JAM ZP 1"	1
7.	616-1605Z	WASHER, FLAT 1.00 S.A.E.	1
8.	312-421	BUSHING, 1.61 I.D. X 3.3125”L	1
9.	312-422	BUSHING, 1.61 I.D. X 2.8125”L	1
10.	602-0806F	BOLT, FLANGE 1/2” X 1-1/2”	4
11.	602-0806Z	BOLT, HCS 1/2” X 1-1/2”	4
12.	614-0801Z	NUT, HEX SERRATED FLANGE 1/2”	4
13.	627-772	HUB, COULTER STRIP-TILL	1
14.	622-057	BEARING, 1.125” SQ BBI SPECIAL	2
15.	627-010	SNAP RING, DISC BDR HOUSING	1
16.	889-125	SCRAPER KIT, ADJ. S-TILL COULTER	-
17.	614-0801Z	NUT, HEX SERRATED FLANGE 1/2”	2
18.	604-0806Z	BOLT, CRG 1/2”X1-1/2” (GR5) ZP	2
19.	310-999	SCRAPER, STRIPTILL COULTER	1

BIGHAM

Bigham Strip Till Generation 3
Parts Break Down
712-670 Row Cleaner Assy, Heavy Duty LH
Model Year 2015 - Current

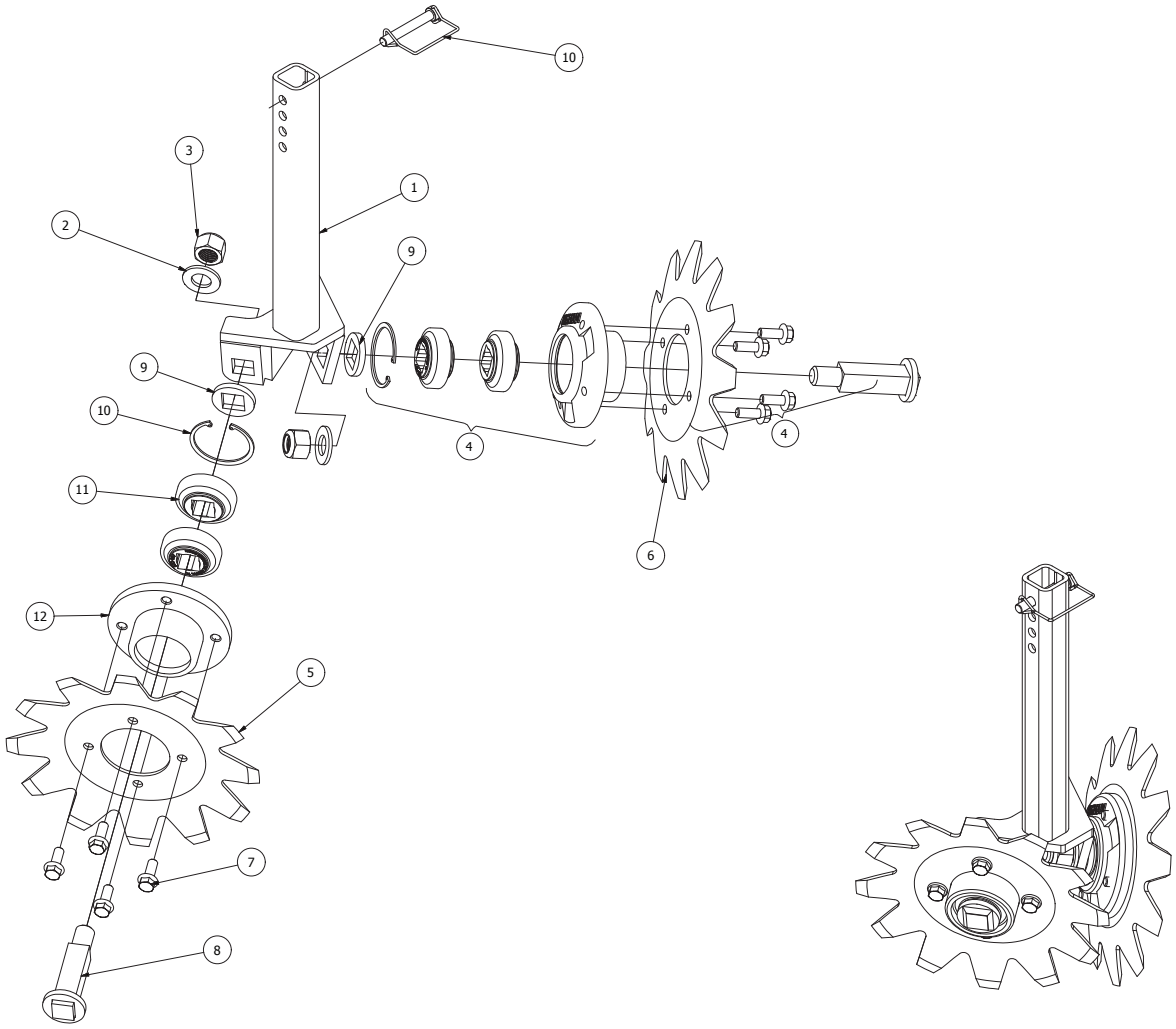

Ref#	P/N	Description	Qty. Req. Per Assy. (* As Required)	Ref#	P/N	Description	Qty. Req. Per Assy. (* As Required)
1.	712-622	BRACKET, LH QUICK ADJUST H.D. ROW CLEANER	1				
2.	616-1605Z	WASHER, FLAT 1.00 S.A.E.	2				
3.	613-1600Z	NUT, HEX NYLOCK ZP 1”	2				
4.	627-773	HUB/BRG. ASSY, CLTR STRIPTILL	2				
5.	630-007R	DISC, 13.50 TRASH WHIPPER RH	1				
6.	630-007L	DISC, 13.50 TRASH WHIPPER LH	1				
7.	607-0805	BOLT, FLG (NF) 1/2” X 1-1/2” (3/4 HD)	8				
8.	610-0059	BOLT, BAR OFF DISC	2				
9.	310-940	HEAD PLATE .31 X 2.25 RD X 1.18 SQ.	2				
10.	617-134	PIN, LOXALL 1/2” X 3” USBL	1				
11.	627-010	SNAP RING, DISC BDR HOUSING	2				
12.	622-057	BEARING, 1.125 SQ BBI SPECIAL	4				
13.	627-772	HUB, COULTER STRIP-TILL	2				

BIGHAM

Bigham Strip Till Generation 3
Parts Break Down
712-671 Row Cleaner Assy, Heavy Duty RH
Model Year 2015 - Current

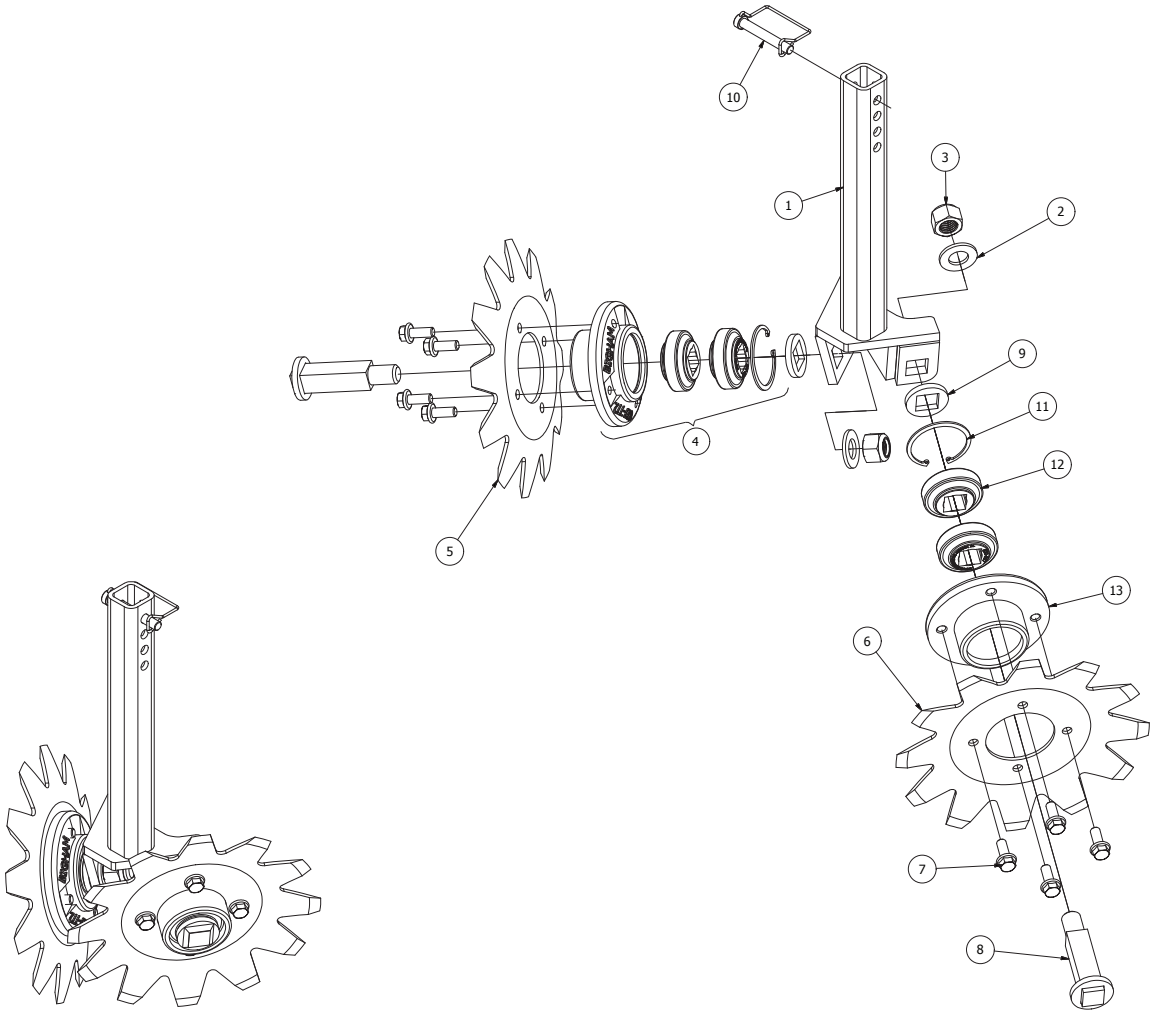

Ref#	P/N	Description	Qty. Req. Per Assy. (* As Required)	Ref#	P/N	Description	Qty. Req. Per Assy. (* As Required)
1.	712-623	BRACKET, RH QUICK ADJUST H.D. ROW CLEANER	1				
2.	616-1605Z	WASHER, FLAT 1.00 S.A.E.	2				
3.	613-1600Z	NUT, HEX NYLOCK ZP 1”	2				
4.	627-773	HUB/BRG. ASSY, CLTR STRIPTILL	2				
5.	630-007R	DISC, 13.50 TRASH WHIPPER RH	1				
6.	630-007L	DISC, 13.50 TRASH WHIPPER LH	1				
7.	607-0805	BOLT, FLG (NF) 1/2” X 1-1/2” (3/4 HD)	8				
8.	610-0059	BOLT, BAR OFF DISC	2				
9.	310-940	HEAD PLATE .31 X 2.25 RD X 1.18 SQ.	2				
10.	617-134	PIN, LOXALL 1/2” X 3” USBL	1				
11.	627-010	SNAP RING, DISC BDR HOUSING	2				
12.	622-057	BEARING, 1.125 SQ BBI SPECIAL	4				
13.	627-772	HUB, COULTER STRIP-TILL	2				

BIGHAM

Bigham Strip Till Generation 3
Parts Break Down
709-037 Shank, Subsoil 1" x 4" x 32" W/Tube
Model Year 2015 - Current

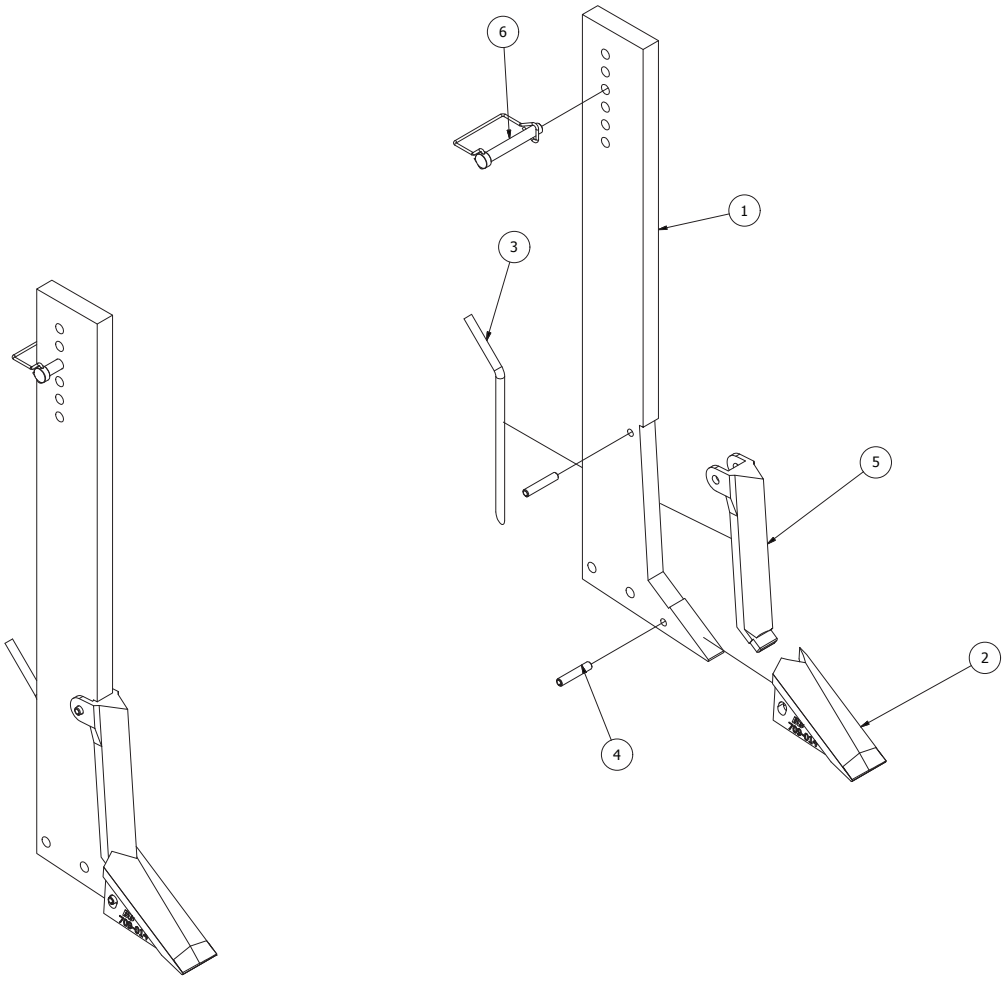

Ref#	P/N	Description	Qty. Req. Per Assy. (* As Required)	Ref#	P/N	Description	Qty. Req. Per Assy. (* As Required)
1.	380-717	SHANK, SUBSOIL 1.00" X 4.00" X 33.00" W / QUICK ADJUST	1				
2.	709-014	POINT, RIPPER CHROMIUM CARBIDE	1				
3.	630-718	FERT. PIPE, .125" SCH. 40 X 11.50"	1				
4.	617-052	PIN, ROLL .375" X 2.00"	2				
5.	709-023C	SHIN, CHROM CARB 1.13" X 8.25" W / TB	1				
6.	617-134	PIN, LOXALL 1/2" X 3" USBL.	1				

BIGHAM

Bigham Strip Till Generation 3
Parts Break Down
709-044 Shank Assembly, Trip Subsoil Quick Adjust 1" x 4" x 36"
Model Year 2015 - Current

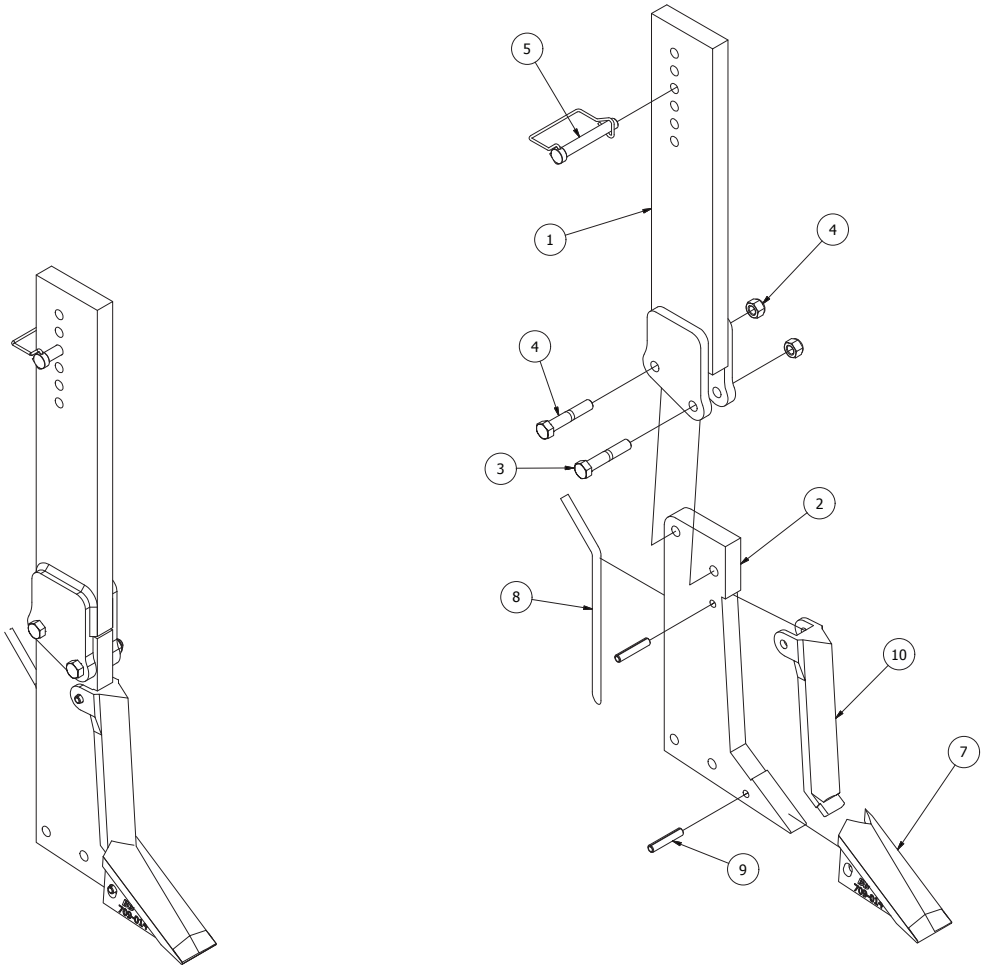

Ref#	P/N	Description	Qty. Req. Per Assy. (* As Required)	Ref#	P/N	Description	Qty. Req. Per Assy. (* As Required)
1.	709-043	SHANK, TRIP SUBSOIL QUICK ADJUST (TOP)	1				
2.	380-714	SHANK, TRIP SUBSOIL (BOTTOM)	1				
3.	601-0811Z	BOLT, HCS 1/2" X 2-3/4" (GR2) ZP	1				
4.	602-0811Z	BOLT, HCS 1/2" X 2-3/4" (GR5) ZP	1				
5.	613-0800Z	NUT, HEX NYLOCK ZP 1/2"	2				
6.	617-134	PIN, LOXALL 1/2" X 3" USBL.	1				
7.	709-014	POINT, RIPPER CHROMIUM CARBIDE	1				
8.	630-718	FERT. PIPE, .125" SCH. 40 X 11.50"	1				
9.	617-052	PIN, ROLL .375" X 2.00"	2				
10.	709-023C	SHIN, CHROM CARB 1.13" X 8.25" W / TB	1				

Bigham Strip Till Generation 3
Parts Break Down
709-045 Shank Assembly, Fertilizer Knife Quick Adjust
Model Year 2015 - Current

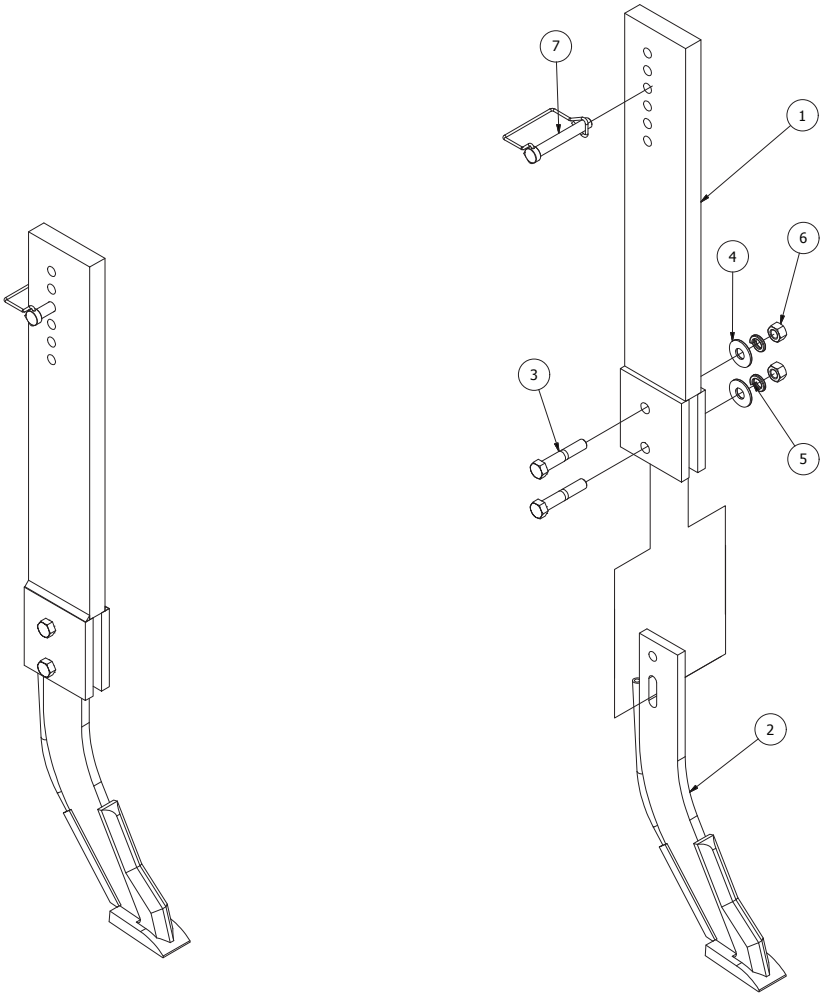

Ref#	P/N	Description	Qty. Req. Per Assy. (* As Required)	Ref#	P/N	Description	Qty. Req. Per Assy. (* As Required)
1.	709-293	SHANK, FERTILIZER STRIPTILL 1" X 4" X 20"	1				
2.	630-715	KNIFE, FERT MOLE POINT / CARB INS	1				
3.	601-0811z	BOLT, HCS 1/2" X 2-3/4" (GR2) ZP	2				
4.	616-0800z	WASHER, FLAT ZP 1/2"	2				
5.	615-0800z	WASHER, LOCK ZP 1/2"	2				
6.	611-0801z	NUT, HEX ZP 1/2" GR. 5	2				
7.	617-134	PIN, LOXALL 1/2" X 3" USBL.	1				

BIGHAM

Bigham Strip Till Generation 3
Parts Break Down
812-148L Blade / Shank / Hub 16" Concave Right
Model Year 2015 - Current

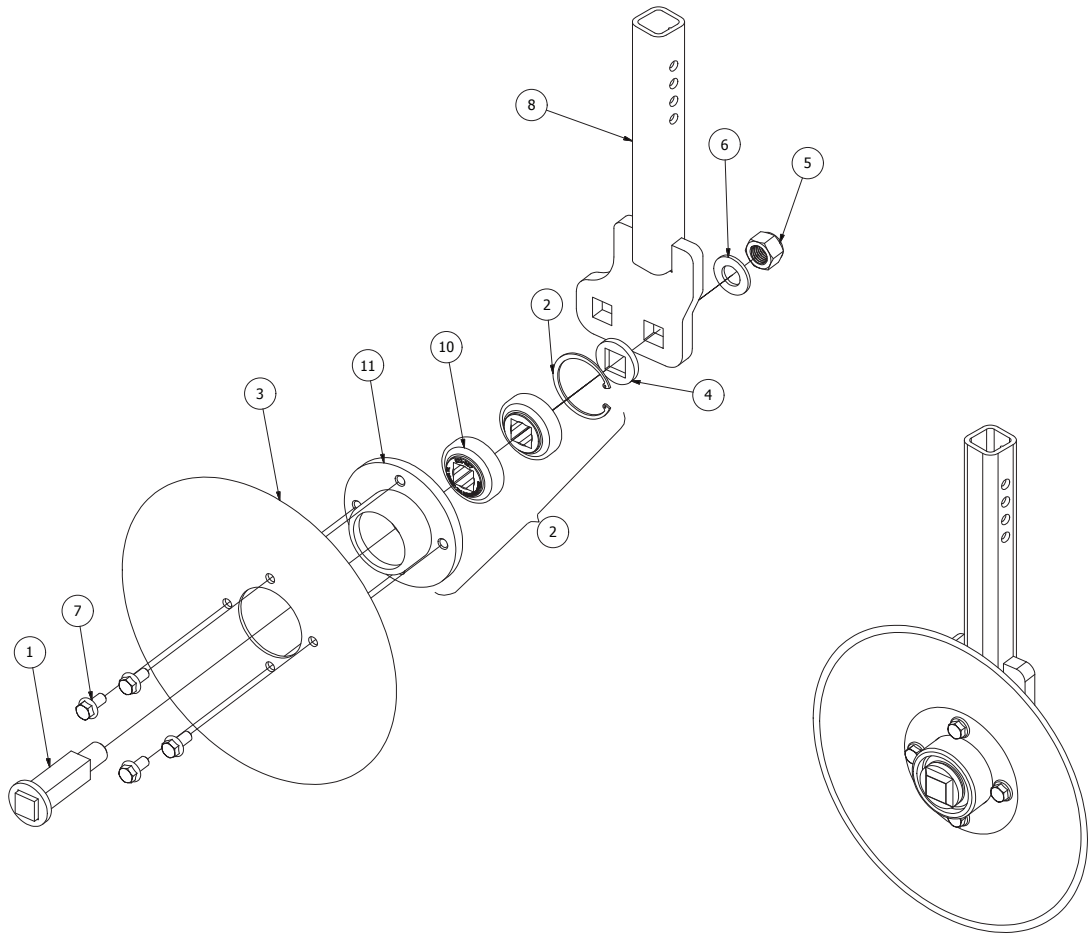

Ref#	P/N	Description	Qty. Req. Per Assy. (* As Required)	Ref#	P/N	Description	Qty. Req. Per Assy. (* As Required)
1.	610-0059	BOLT, BAR OFF DISC	1				
2.	627-773	HUB/BRG. ASSY, CLTR. STRIPTILL	1				
3.	630-028	DISC, CONC 16” X 4.5MM 4 HOLE	1				
4.	310-940	HEAD PLATE .31 X 2.25 RD X 1.18 SQ.	1				
5.	613-1600Z	NUT, HEX NYLOCK ZP 1”	1				
6.	616-1605Z	WASHER, FLAT 1.00 S.A.E.	1				
7.	607-0804	BOLT, FLG (NF) 1/2” X 1” (3/4”HD)	4				
8.	689-313L	SHANK WELDMENT, COVERING DISC LEFT	1				
9.	627-010	SNAP RING, DISC BDR HOUSING	1				
10.	622-057	BEARING, 1.125 SQ BBI SPECIAL	2				
11.	627-772	HUB, COULTER STRIP-TILL	1				

BIGHAM

Bigham Strip Till Generation 3
Parts Break Down
812-148R Blade / Shank / Hub 16" Concave Right
Model Year 2015 - Current

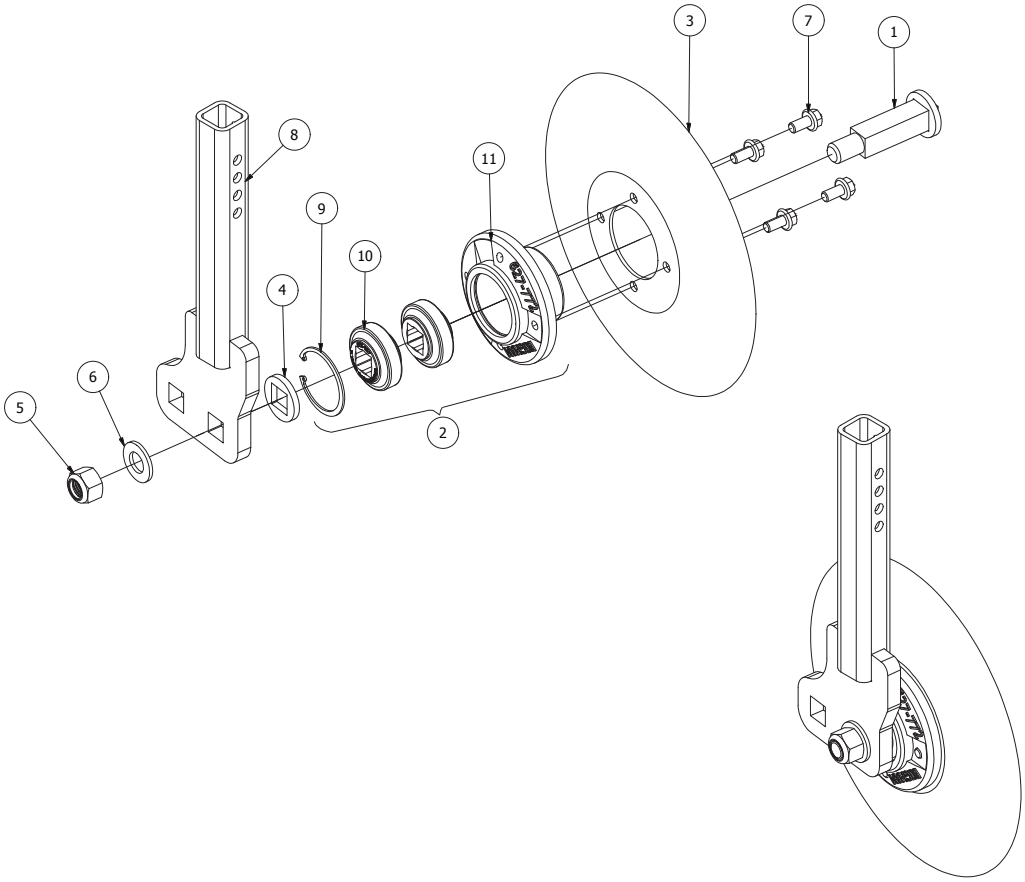

Ref#	P/N	Description	Qty. Req. Per Assy. (* As Required)	Ref#	P/N	Description	Qty. Req. Per Assy. (* As Required)
1.	610-0059	BOLT, BAR OFF DISC	1				
2.	627-773	HUB/BRG. ASSY, CLTR. STRIPTILL	1				
3.	630-028	DISC, CONC 16” X 4.5MM 4 HOLE	1				
4.	310-940	HEAD PLATE .31 X 2.25 RD X 1.18 SQ.	1				
5.	613-1600Z	NUT, HEX NYLOCK ZP 1”	1				
6.	616-1605Z	WASHER, FLAT 1.00 S.A.E.	1				
7.	607-0804	BOLT, FLG (NF) 1/2” X 1” (3/4”HD)	4				
8.	689-313R	SHANK WELDMENT, COVERING DISC RIGHT	1				
9.	627-010	SNAP RING, DISC BDR HOUSING	1				
10.	622-057	BEARING, 1.125 SQ BBI SPECIAL	2				
11.	627-772	HUB, COULTER STRIP-TILL	1				

BIGHAM

Bigham Strip Till Generation 3
Parts Break Down
889-536 Disc Bundle, 16" Concave Heavy Duty
Model Year 2015 - Current

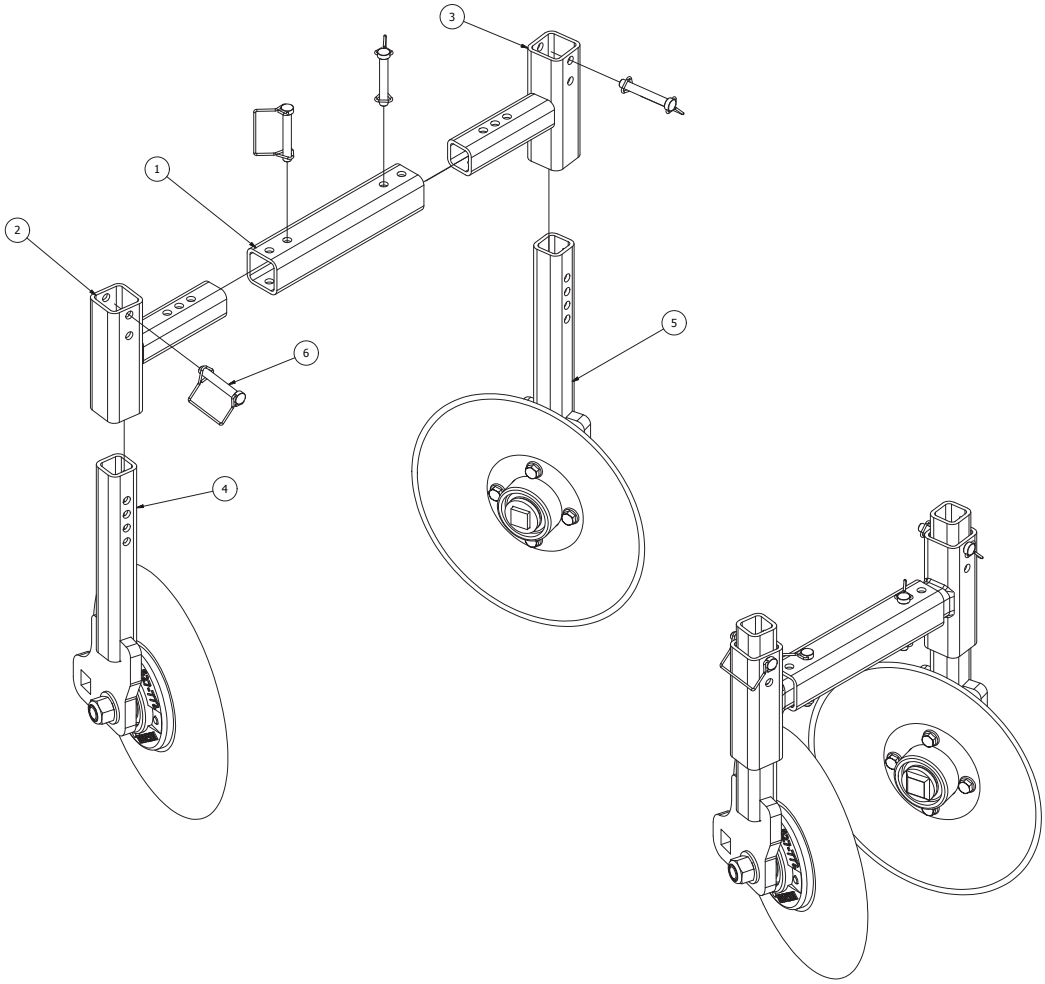

Ref#	P/N	Description	Qty. Req. Per Assy. (* As Required)	Ref#	P/N	Description	Qty. Req. Per Assy. (* As Required)
1.	422-0125	TUBE, 2.50" X 2.50" X .238" W. CUT 11.75"	1				
2.	689-314R	ARM, COVERING DISC RIGHT	1				
3.	689-314L	ARM, COVERING DISC LEFT	1				
4.	812-148R	BLADE/SHANK/HUB 16" CONC. RIGHT	1				
5.	812-148L	BLADE/SHANK/HUB 16" CONC. LEFT	1				
6.	617-134	PIN, LOXALL 1/2" X 3" USBL.	4				

BIGHAM

Bigham Strip Till Generation 3
Parts Break Down
812-149L Blade / Shank / Hub 17" Wavy Left
Model Year 2015 - Current

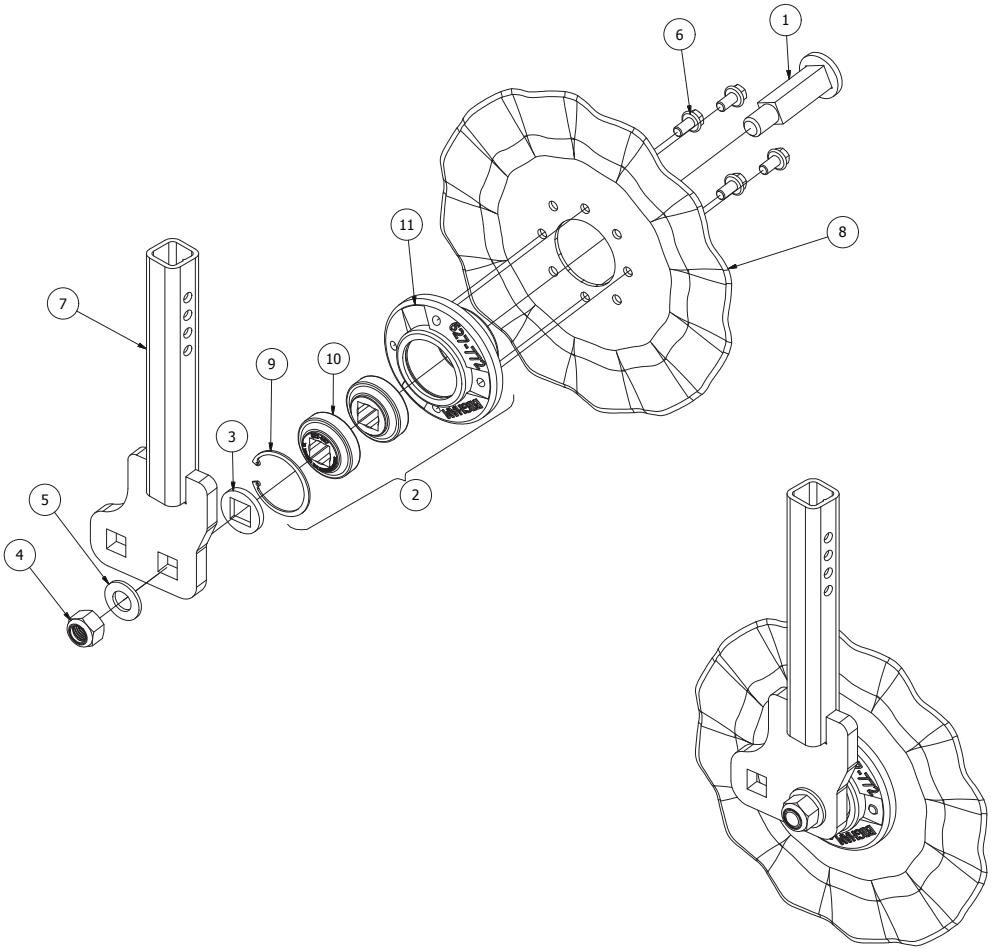

Ref#	P/N	Description	Qty. Req. Per Assy. (* As Required)
1.	610-0059	BOLT, BAR OFF DISC	1
2.	627-773	HUB/BRG. ASSY, CLTR. STRIPTILL	1
3.	630-008	BLADE, WAVY 17” X 4MM 4 HOLE CLTR	1
4.	310-940	HEAD PLATE .31 X 2.25 RD X 1.18 SQ.	1
5.	613-1600Z	NUT, HEX NYLOCK ZP 1”	1
6.	616-1605Z	WASHER, FLAT 1.00 S.A.E.	1
7.	607-0804	BOLT, FLG (NF) 1/2” X 1” (3/4”HD)	4
8.	689-313L	SHANK WELDMENT, COVERING DISC LEFT	1
9.	627-010	SNAP RING, DISC BDR HOUSING	1
10.	622-057	BEARING, 1.125 SQ BBI SPECIAL	2
11.	627-772	HUB, COULTER STRIP-TILL	1

Ref#	P/N	Description	Qty. Req. Per Assy. (* As Required)

BIGHAM

Bigham Strip Till Generation 3
Parts Break Down
812-149R Blade / Shank / Hub 17" Wavy Right
Model Year 2015 - Current

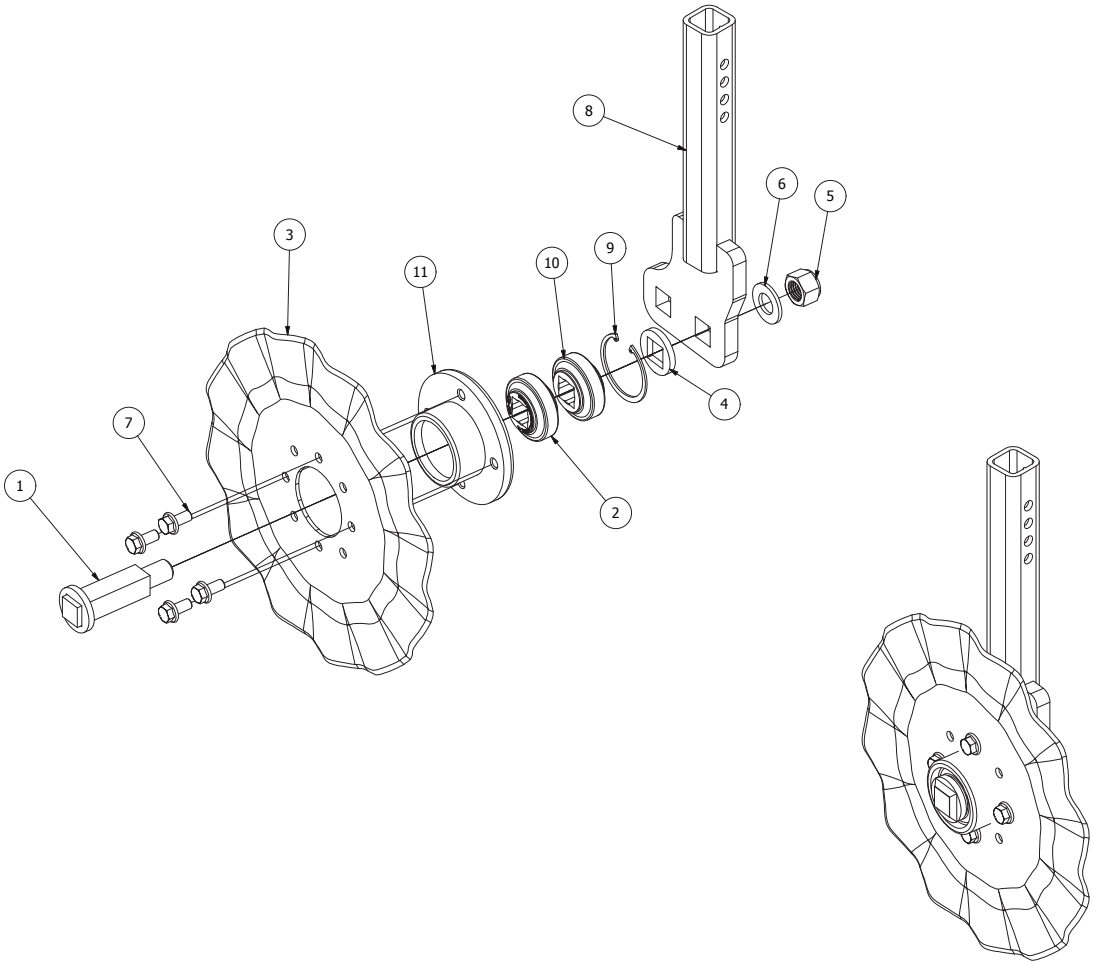

Ref#	P/N	Description	Qty. Req. Per Assy. (* As Required)	Ref#	P/N	Description	Qty. Req. Per Assy. (* As Required)
1.	610-0059	BOLT, BAR OFF DISC	1				
2.	627-773	HUB/BRG. ASSY, CLTR. STRIPTILL	1				
3.	630-008	BLADE, WAVY 17” X 4MM 4 HOLE CLTR	1				
4.	310-940	HEAD PLATE .31 X 2.25 RD X 1.18 SQ.	1				
5.	613-1600Z	NUT, HEX NYLOCK ZP 1”	1				
6.	616-1605Z	WASHER, FLAT 1.00 S.A.E.	1				
7.	607-0804	BOLT, FLG (NF) 1/2” X 1” (3/4”HD)	4				
8.	689-313R	SHANK WELDMENT, COVERING DISC RIGHT	1				
9.	627-010	SNAP RING, DISC BDR HOUSING	1				
10.	622-057	BEARING, 1.125 SQ BBI SPECIAL	2				
11.	627-772	HUB, COULTER STRIP-TILL	1				

BIGHAM

Bigham Strip Till Generation 3
Parts Break Down
889-537 Disc Bundle, 17" Wavy Heavy Duty
Model Year 2015 - Current

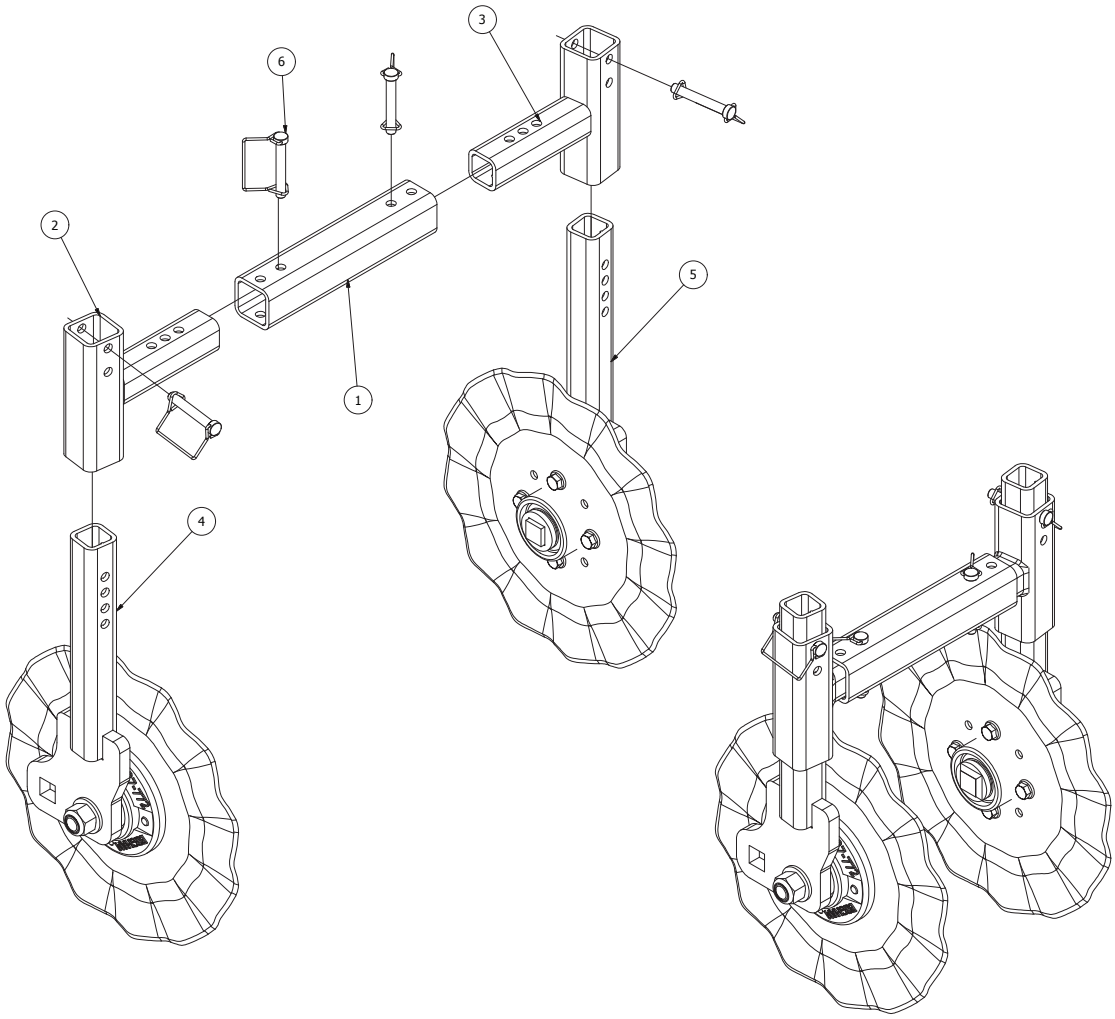

Ref#	P/N	Description	Qty. Req. Per Assy. (* As Required)	Ref#	P/N	Description	Qty. Req. Per Assy. (* As Required)
1.	422-0125	TUBE, 2.50” X 2.50” X .238” W. CUT 11.75”	1				
2.	689-314R	ARM, COVERING DISC RIGHT	1				
3.	689-314L	ARM, COVERING DISC LEFT	1				
4.	812-149L	BLADE/SHANK/HUB 17” WAVY LEFT	1				
5.	812-149R	BLADE/SHANK/HUB 17” WAVY RIGHT	1				
6.	617-134	PIN, LOXALL 1/2” X 3” USBL.	4				

BIGHAM

Bigham Strip Till Generation 3
Parts Break Down
889-211 Flat Basket Bundle, 17" SDST
Model Year 2015 - Current

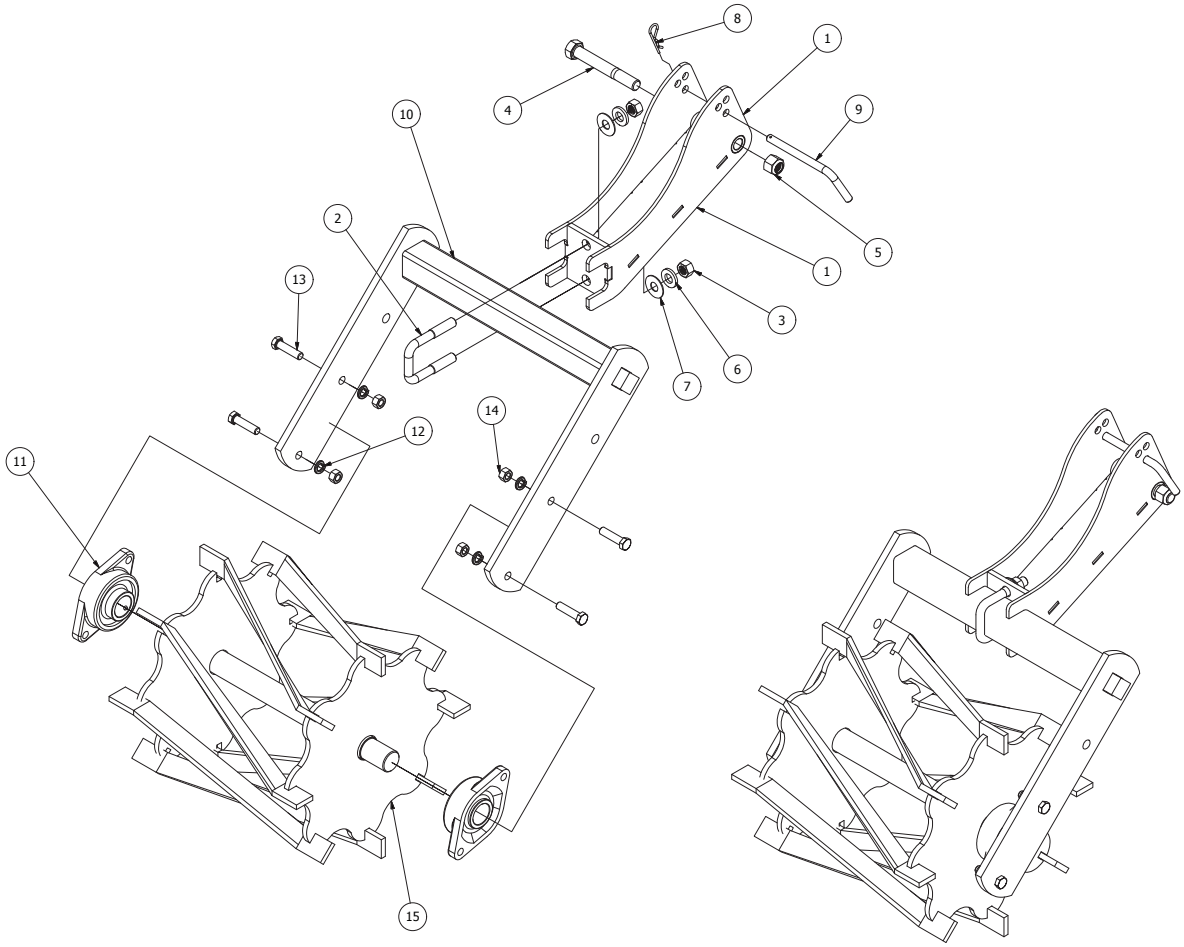

Ref#	P/N	Description	Qty. Req. Per Assy. (* As Required)
1.	685-332	WELDMENT, BASKET ARM	1
2.	610-0015	U-BOLT, 5/8" FOR 2.125"SQ.BAR ZP	1
3.	611-1001Z	NUT, HEX ZP 5/8"	2
4.	602-1222Z	BOLT, HCS 3/4"X5-1/2" (GR5) ZP	1
5.	613-1200Z	NUT, HEX NYLOCK ZP 3/4"	1
6.	615-1000Z	WASHER, LOCK ZP 5/8	2
7.	616-1000Z	WASHER, FLAT ZP 5/8	2
8.	617-106	HAIRPIN 1/8X2" (1/2"I.D.)	1
9.	617-149	PIN, STRIPTILL BASKET ADJUSTMENT	1
10.	685-324	YOKE, WELDMENT, 17.00 TORSION SPRING	1
11.	622-084	BEARING ASSY., 1.50FL (IMP)	2
12.	615-0800Z	WASHER, LOCK ZP 1/2	4
13.	602-0808Z	BOLT, HCS 1/2 X 2.00 GR.5 ZP	4
14.	611-0801Z	NUT, HEX ZP 1/2 GR. 5	4
15.	685-200	BASKET WLDMNT., 17.00 WIDE/ 16.00 DIA.	1

BIGHAM

Bigham Strip Till Generation 3
Parts Break Down
889-212 Concave Basket Bundle, 17" SDST
Model Year 2015 - Current

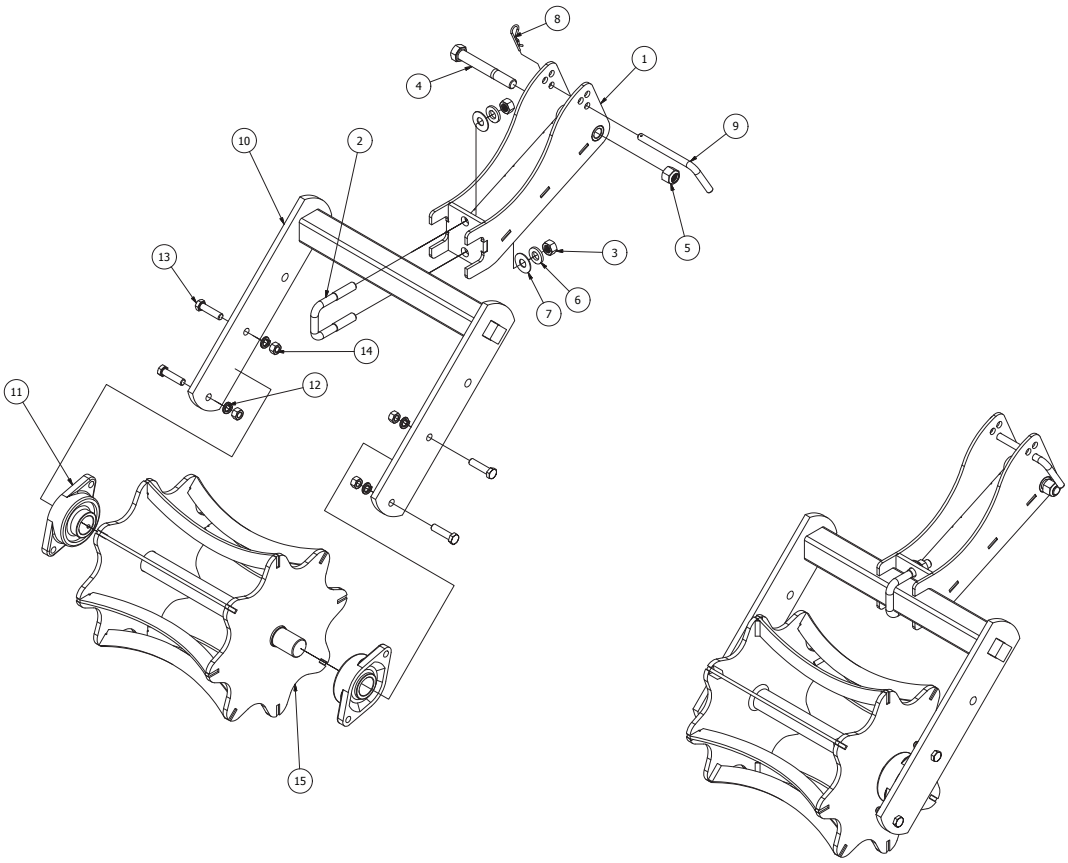

Ref#	P/N	Description	Qty. Req. Per Assy. (* As Required)
1.	685-332	WELDMENT, BASKET ARM	1
2.	610-0015	U-BOLT, 5/8" FOR 2.125"SQ.BAR ZP	1
3.	611-1001Z	NUT, HEX ZP 5/8"	2
4.	602-1222Z	BOLT, HCS 3/4"X5-1/2" (GR5) ZP	1
5.	613-1200Z	NUT, HEX NYLOCK ZP 3/4"	1
6.	615-1000Z	WASHER, LOCK ZP 5/8	2
7.	616-1000Z	WASHER, FLAT ZP 5/8	2
8.	617-106	HAIRPIN 1/8X2" (1/2"I.D.)	1
9.	617-149	PIN, STRIPTILL BASKET ADJUSTMENT	1
10.	685-324	YOKE, WELDMENT, 17.00 TORSION SPRING	1
11.	622-084	BEARING ASSY., 1.50FL (IMP)	2
12.	615-0800Z	WASHER, LOCK ZP 1/2	4
13.	602-0808Z	BOLT, HCS 1/2 X 2.00 GR.5 ZP	4
14.	611-0801Z	NUT, HEX ZP 1/2 GR. 5	4
15.	685-200S	BASKET, 17"WIDE/16"DIA. CONCAVE	1

BIGHAM

Bigham Strip Till Generation 3
Parts Break Down
889-213 Roller Bundle, 17" SDST
Model Year 2015 - Current

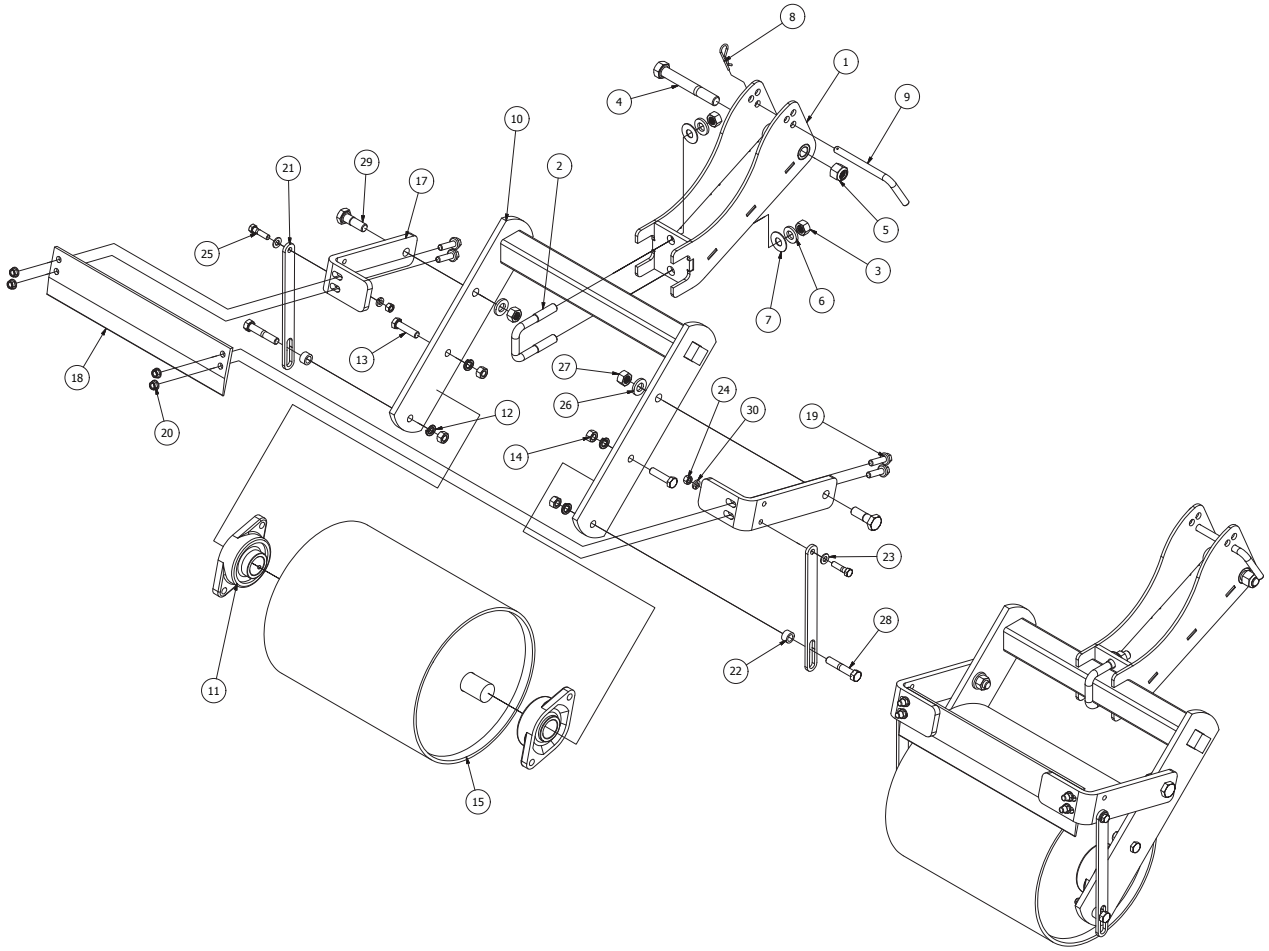

Ref#	P/N	Description	Qty. Req. Per Assy. (* As Required)
1.	685-332	WELDMENT, BASKET ARM	1
2.	610-0015	U-BOLT, 5/8" FOR 2.125"SQ.BAR ZP	1
3.	611-1001Z	NUT, HEX ZP 5/8"	2
4.	602-1222Z	BOLT, HCS 3/4"X5-1/2" (GR5) ZP	1
5.	613-1200Z	NUT, HEX NYLOCK ZP 3/4"	1
6.	615-1000Z	WASHER, LOCK ZP 5/8	2
7.	616-1000Z	WASHER, FLAT ZP 5/8	2
8.	617-106	HAIRPIN 1/8X2" (1/2"I.D.)	1
9.	617-149	PIN, STRIPTILL BASKET ADJUSTMENT	1
10.	685-324	YOKE, WELDMENT, 17.00 TORSION SPRING	1
11.	622-084	BEARING ASSY., 1.50FL (IMP)	2
12.	615-0800Z	WASHER, LOCK ZP 1/2	4
13.	602-0808Z	BOLT, HCS 1/2 X 2.00 GR.5 ZP	4
14.	611-0801Z	NUT, HEX ZP 1/2 GR. 5	4
15.	686-205	BASKET WLDMNT., 17.00 WIDE/ 16.00 DIA.	1
16.	886-986	SCRAPER ASSY., 17" SMOOTH ROLLER	-
17.	310-983	BRACKET, UNIV. SCRAPER BLANK	2
18.	686-984	SCRAPER BLADE, .28X4.00X18.50	1
19.	603-0705Z	BOLT, WHIZLOCK 7/16 X 1.50 GR.5	4
20.	614-0701Z	NUT, HEX SERATED FLANGE 7/16	4
21.	310-985	MOUNT PLT., ADJ. SHIELD (BLANK)	2
22.	116-0801	PIPE, .50 SCH. 80	2
23.	616-0600Z	WASHER, FLAT ZP 3/8	2
24.	611-0601Z	NUT, HEX ZP 3/8	2
25.	602-0606Z	BOLT, HCS 3/8 X 1.50 (GR. 5) ZP	2
26.	615-1000Z	WASHER, LOCK ZP 5/8	2
27.	611-1001Z	NUT, HEX ZP 5/8"	2
28.	601-0811Z	BOLT, HCS 1/2" X 2-3/4" (GR2) ZP	2
29.	602-1008Z	BOLT, HCS 5/8 X 2.00 (GR.5) ZP	2
30.	615-0600Z	WASHER, LOCK ZP 3/8	2

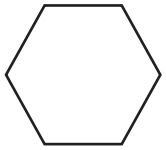

GRADE 2:
No Marks

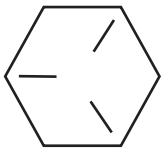

GRADE 5:
3 Lines on Bolt Head

RECOMMENDED ASSEMBLY TORQUES FOR HEXAGON HEAD CAP SCREWS

Based on dry assembly. Variables such as lubrication, plating etc. may reduce the values listed below as much as 20%, and must be taken into consideration.

	Bright Cap Screws 1018 **Grade 2**			Heat Treated 1038 Hexagon Head Cap Screws, **SAE Grade 5**			
Cap Screw Diam.	Yield Strength PSI Min.	Recommended Torque **(Ft. Lbs.)** **UNC**	UNF	Yield Strength PSI Min.	Tensile Strength PSI Min.	Recommended Torque **(Ft. Lbs.)** **UNC**	UNF
1/4”	58,000	6	7	90,000	120,000	11	13
5/16”	58,000	13	14	90,000	120,000	21	23
3/8”	58,000	**23**	26	90,000	120,000	**38**	40
7/16”	58,000	**37**	41	90,000	120,000	**55**	60
1/2”	58,000	**57**	64	90,000	120,000	**85**	95
5/8”	55,000	**111**	128	90,000	120,000	**175**	210
3/4”	55,000	**200**	223	90,000	120,000	**300**	330
7/8”	55,000	**315**	340	81,000	115,000	**450**	490
1”	50,000	**400**	460	81,000	115,000	**680**	715
1-1/8”	50,000	**570**	635	77,000	105,000	**885**	990

General Formula for calculating Torque is as follows:

Torque in Inch Lbs. = .2 x Nominal Diameter of Screw x Load in Lbs., where Load = 80% of Yield Strength, expressed in Lbs., not pounds per square inch.

The tension induced in a cap screw may be checked by measuring overall length before torquing and then under torque load. The screw stretches .001” per inch of screw length for each 30,000 P.S.I. induced tension. Applies only to loads below the yield point.

BIGHAM

Notes:

BIGHAM

Notes:

BIGHAM

Notes:

Notes:

BIGHAM

Notes:

Notes: